IEI Integration Corp.

MODEL:

IVS-200-ULT2

IEI Fanless Embedded System with Intel® Core™ i5-5350U/Celeron® 3755U Processor, Quad GbE LAN, HDMI, Dual RS-232/422/485, USB 3.0, RoHS Compliant,

User Manual

Rev. 1.00 – September 17, 2015

RoHS Lead Free

Revision

Date	Version	Changes
September 17, 2015	1.00	Initial release

Copyright

COPYRIGHT NOTICE

The information in this document is subject to change without prior notice in order to improve reliability, design and function and does not represent a commitment on the part of the manufacturer.

In no event will the manufacturer be liable for direct, indirect, special, incidental, or consequential damages arising out of the use or inability to use the product or documentation, even if advised of the possibility of such damages.

This document contains proprietary information protected by copyright. All rights are reserved. No part of this manual may be reproduced by any mechanical, electronic, or other means in any form without prior written permission of the manufacturer.

TRADEMARKS

All registered trademarks and product names mentioned herein are used for identification purposes only and may be trademarks and/or registered trademarks of their respective owners.

Manual Conventions

WARNING

Warnings appear where overlooked details may cause damage to the equipment or result in personal injury. Warnings should be taken seriously.

CAUTION

Cautionary messages should be heeded to help reduce the chance of losing data or damaging the product.

NOTE

These messages inform the reader of essential but non-critical information. These messages should be read carefully as any directions or instructions contained therein can help avoid making mistakes.

HOT SURFACE

This symbol indicates a hot surface that should not be touched without taking care.

Table of Contents

1 INTRODUCTION 1

1.1 OVERVIEW 2
1.2 BENEFITS 2
1.3 FEATURES 3
1.4 MODEL VARIATIONS 3
1.5 EXTERNAL OVERVIEW 4
1.5.1 Front Panel 4
1.5.2 Rear Panel 5
1.5.3 Bottom Surface 6
1.6 TECHNICAL SPECIFICATIONS 7
1.7 DIMENSIONS 9

2 UNPACKING 10

2.1 UNPACKING 11
2.2 PACKING LIST 11
2.3 OPTIONAL ITEMS 12

3 INSTALLATION 14

3.1 ANTI-STATIC PRECAUTIONS 15
3.2 INSTALLATION PRECAUTIONS 15
3.2.1 High Surface Temperature 16
3.3 INSTALLATION PROCEDURE 17
3.4 OPENING BOTTOM COVER 17
3.5 CONFIGURE THE JUMPER SETTINGS 19
3.5.1 Clear CMOS 19
3.5.2 AT/ATX Mode Selection 20
3.5.3 ACC Mode On/Off 20
3.6 SOLID-STATE DRIVE INSTALLATION 21
3.7 MSATA/FULL-SIZE PCIE MINI CARD INSTALLATION 23
3.8 WLAN/WWAN MODULE INSTALLATION (OPTIONAL) 26
3.9 SIM CARD INSTALLATION (OPTIONAL) 29

3.10 RS-232/422/485 SERIAL PORT CONNECTION 30
3.11 MOUNTING THE SYSTEM 31
3.11.1 Mounting with Mounting Brackets *31*
3.11.2 Mounting with VESA Mount Kit (Optional) *32*
3.12 POWER-ON PROCEDURE 35
3.12.1 Installation Checklist *35*
3.12.2 Terminal Block Pinouts *35*
3.12.3 Power-on Procedure *36*
3.13 DRIVER INSTALLATION 36

4 BIOS 38

4.1 INTRODUCTION 39
4.1.1 Starting Setup *39*
4.1.2 Using Setup *39*
4.1.3 Getting Help *40*
4.1.4 Unable to Reboot After Configuration Changes *40*
4.1.5 BIOS Menu Bar *40*
4.2 MAIN 41
4.3 ADVANCED 43
4.3.1 CPU Configuration *44*
4.3.2 ACPI Settings *47*
4.3.3 F81866 Super IO Configuration *48*
4.3.3.1 Serial Port n Configuration 48
4.3.4 RTC Wake Settings *52*
4.3.5 Serial Port Console Redirection *53*
4.3.5.1 Console Redirection Settings 54
4.3.6 iEi Feature *56*
4.3.7 SATA Configuration *57*
4.3.8 Intel(R) Rapid Start Technology *58*
4.3.9 USB Configuration *59*
4.3.10 iWDD H/W Monitor *60*
4.4 CHIPSET 61
4.4.1 System Agent (SA) Configuration *62*
4.4.1.1 Graphics Configuration 63
4.4.1.2 Memory Configuration 64

4.4.2 PCH-IO Configuration *65*
4.4.2.1 PCI Express Configuration 66
4.4.2.2 PCH Azalia Configuration 67
4.5 SECURITY 68
4.6 BOOT 69
4.7 SAVE & EXIT 71

5 TROUBLESHOOTING AND MAINTENANCE 73

5.1 IVS-200-ULT2 SYSTEM MAINTENANCE OVERVIEW 74
5.2 SYSTEM TROUBLESHOOTING 74
5.2.1 The System Doesn't Turn On *74*
5.2.2 The System Doesn't Boot Up *75*
5.2.3 More Troubleshooting *75*
5.3 COMPONENT REPLACEMENT PROCEDURE 76
5.3.1 SO-DIMM Replacement *76*

6 INTERFACE CONNECTORS 78

6.1 PERIPHERAL INTERFACE CONNECTORS 79
6.2 INTERNAL PERIPHERAL CONNECTORS 79
6.2.1 Battery Connector (CN1) *80*
6.2.2 Digital I/O Connector (DIO1) *80*
6.2.3 Fan Connector (FAN1) *81*
6.2.4 RS-232 Serial Port Connectors (COM3 ~ COM6) *81*
6.2.5 SATA Power Connector (SATA_PWR1) *81*
6.2.6 SPI Flash Connector, BIOS (SPI1) *82*
6.2.7 SPI Flash Connector, EC (JSPI1) *82*
6.3 EXTERNAL INTERFACE PANEL CONNECTORS 82
6.3.1 Ethernet Connector (LAN1) *82*
6.3.2 Ethernet Connectors (LAN2 ~ LAN4) *83*
6.3.3 RS-232/422/485 DB-9 Serial Ports (COM1, COM2) *83*
6.3.4 USB 2.0 Connectors (USB_CON2) *83*
6.3.5 USB 3.0 Connectors (USB_CON1) *84*
6.3.6 Power Input Terminal Block (DC_IN1) *84*
6.3.7 VGA Connector (VGA1) *84*

A REGULATORY COMPLIANCE 85

B SAFETY PRECAUTIONS 90

B.1 SAFETY PRECAUTIONS 91

B.1.1 General Safety Precautions 91

B.1.2 Anti-static Precautions 92

B.1.3 Product Disposal 93

B.2 MAINTENANCE AND CLEANING PRECAUTIONS 93

B.2.1 Maintenance and Cleaning 93

B.2.2 Cleaning Tools 94

C BIOS MENU OPTIONS 95

C.1 BIOS CONFIGURATION OPTIONS 96

D WATCHDOG TIMER 98

E HAZARDOUS MATERIALS DISCLOSURE 101

E.1 HAZARDOUS MATERIALS DISCLOSURE TABLE FOR IPB PRODUCTS CERTIFIED AS ROHS COMPLIANT UNDER 2002/95/EC WITHOUT MERCURY 102

List of Figures

Figure 1-1: IVS-200-ULT2 Series Embedded System 2
Figure 1-2: Front Panel 4
Figure 1-3: Rear Panel 5
Figure 1-4: Bottom Surface 6
Figure 1-5: Dimensions (mm) 9
Figure 3-1: Bottom Cover Retention Screws 18
Figure 3-2: Opening Bottom Cover 18
Figure 3-3: Clear CMOS Button 19
Figure 3-4: AT/ATX Mode Select Switch Location 20
Figure 3-5: ACC Mode On/Off Switch Location 20
Figure 3-6: SSD Bracket Retention Screws 21
Figure 3-7: Removing SSD Bracket 21
Figure 3-8: SSD Retention Screws 22
Figure 3-9: SSD Installation 22
Figure 3-10: PCIe Mini Slot Location 23
Figure 3-11: Removing the Screw and Standoff for Half-size PCIe Mini Card 24
Figure 3-12: Removing the Retention Screw 24
Figure 3-13: Inserting the Full-size PCIe Mini Card into the Slot at an Angle 25
Figure 3-14: Securing the Full-size PCIe Mini Card 25
Figure 3-15: Knockout Holes for External Antenna 26
Figure 3-16: PCIe Mini Slot Location 26
Figure 3-17: Removing the Retention Screw 27
Figure 3-18: Inserting the WLAN/WWAN Module 27
Figure 3-19: Securing WLAN/WWAN Module and Connecting RF Cable 28
Figure 3-20: Securing SMA Connector and External Antenna Installation 28
Figure 3-21: Unlock Slot Cover 29
Figure 3-22: SIM Card Installation 30
Figure 3-23: Removing Foot Pads 31
Figure 3-24: Mounting Bracket Retention Screws 32
Figure 3-25: Wall-mounting Bracket 33
Figure 3-26: Mount the Embedded System 34

Figure 3-27: Tighten Retention Screw 34
Figure 3-28: Terminal Block Pinouts 35
Figure 3-29: Power Button and Power LED 36
Figure 5-1: SO-DIMM Location 77
Figure 5-2: SO-DIMM Installation 77
Figure 6-1: Jumper and Connector Locations 79

List of Tables

Table 1-1: Model Variations 3
Table 1-2: Technical Specifications 8
Table 2-1: Package List 12
Table 2-2: Optional Items 13
Table 3-1: COM1 and COM2 Pinouts 30
Table 4-1: BIOS Navigation Keys 40
Table 6-1: Peripheral Interface Connectors 80
Table 6-2: Battery Connector (CN1) Pinouts 80
Table 6-3: Digital I/O Connector (DIO1) Pinouts 80
Table 6-4: Fan Connector (FAN1) Pinouts 81
Table 6-5: RS-232 Serial Port Connector (COM3 ~ COM6) Pinouts 81
Table 6-6: SATA Power Connector (SATA_PWR1) Pinouts 81
Table 6-7: SPI Flash Connector (SPI1) Pinouts 82
Table 6-8: SPI Flash Connector (JSPI1) Pinouts 82
Table 6-9: Ethernet Connector (LAN1) Pinouts 82
Table 6-10: Ethernet Connectors (LAN2 ~ LAN4) Pinouts 83
Table 6-11: RS-232/422/485 DB-9 Serial Port (COM1, COM2) Pinouts 83
Table 6-12: USB 2.0 Connectors (USB_CON2) Pinouts 83
Table 6-13: USB 3.0 Connectors (USB_CON1) Pinouts 84
Table 6-14: Power Input Terminal Block (DC_IN1) Pinouts 84
Table 6-15: VGA Connector (VGA1) Pinouts 84

List of BIOS Menus

BIOS Menu 1: Main 42
BIOS Menu 2: Advanced 43
BIOS Menu 3: CPU Configuration 44
BIOS Menu 4: ACPI Settings 47
BIOS Menu 5: F81866 Super IO Configuration 48
BIOS Menu 6: Serial Port n Configuration Menu 48
BIOS Menu 7: RTC Wake Settings 52
BIOS Menu 8: Serial Port Console Redirection 53
BIOS Menu 9: Console Redirection Settings 54
BIOS Menu 10: iEi Feature 56
BIOS Menu 11: SATA Configuration 57
BIOS Menu 12: Intel(R) Rapid Start Technology Configuration 58
BIOS Menu 13: USB Configuration 59
BIOS Menu 14: iWDD H/W Monitor 60
BIOS Menu 15: Chipset 61
BIOS Menu 16: System Agent (SA) Configuration 62
BIOS Menu 17: Graphics Configuration 63
BIOS Menu 18: Memory Configuration 64
BIOS Menu 19: PCH-IO Configuration 65
BIOS Menu 20: PCI Express Configuration 66
BIOS Menu 21: PCH Azalia Configuration 67
BIOS Menu 22: Security 68
BIOS Menu 23: Boot 69
BIOS Menu 24: Save & Exit 71

Chapter

1

Introduction

1.1 Overview

Figure 1-1: IVS-200-ULT2 Series Embedded System

The IVS-200-ULT2 fanless embedded system is powered by Intel® Core™ i5-5350U processor or Intel® Celeron® processor 3755U. It is designed for vehicle applications that require minimum installation space.

The IVS-200-ULT2 accepts a wide range of DC power input (9 V – 36 V), allowing it to be powered anywhere. Wi-Fi and WWAN capabilities plus four RJ-45 Ethernet connectors ensure smooth connection of the system to an external LAN. The display interface options include VGA and HDMI with two audio jacks.

Two USB 3.0 ports, two USB 2.0 ports, two RS-232/422/485 ports, and four D-sub reserved ports provide rich I/O options for various applications. The IVS-200-ULT2 embedded subsystems are all capable of supporting one 2.5” SATA 6Gb/s solid-state drive (SSD) or an mSATA module.

1.2 Benefits

The IVS-200-ULT2 embedded system has the following benefits:

- Easy installation saves installation time
- Complete integration saves solution development time and cost
- Secure storage with one SATA SSD and mSATA supported
- Compact size saves space

- Powerful preinstalled Intel® Core™ i5-5350U processor or Intel® Celeron® processor 3755U and motherboard ensures rigorous processing needs can be met

1.3 Features

The IVS-200-ULT2 has the following features

- RoHS compliant design
- Fanless system
- Intel® Core™ i5-5350U processor or Intel® Celeron® processor 3755U supported
- Quad GbE LAN for high speed network applications
- Support two RS-232/422/485 ports
- Support four USB ports (two USB 2.0 and two USB 3.0)
- Four D-sub reserved ports (for RS-232 or digital I/O)
- One SATA 6Gb/s SSD and one mSATA module supported
- Supports up to 4096x2304 resolutions with HDMI interface
- One on-board SIM card slot supports WWAN connection
- VESA 100 mount supported
- Optional 802.11b/g/n 1T1R wireless connection

1.4 Model Variations

There are two models in the IVS-200-ULT2 embedded system series. The two models are all preinstalled with 4 GB of DDR3 memory. The model variations are listed in **Table 1-1** below.

	Processor
IVS-200-ULT2-i5/4G-R10	Intel® Core™ i5-5350U (dual-core, 1.8 GHz, 15W TDP)
IVS-200-ULT2-C/4G-R10	Intel® Celeron® 3755U (dual-core, 1.7 GHz, 15W TDP)

Table 1-1: Model Variations

1.5 External Overview

The IVS-200-ULT2 RoHS compliant, fanless embedded system features industrial grade components that offer longer operating life, high shock/vibration resistance and endurance over a wide temperature range. The IVS-200-ULT2 combines these features in an aluminum enclosure, offering system integrators and developers the best selection of robust and high performance computing system platforms for vehicle applications.

1.5.1 Front Panel

The IVS-200-ULT2 front panel contains:

- 1 x Audio line-out jack
- 1 x Audio mic-in jack
- 1 x SSD bay
- 1 x HDMI ports
- 2 x RS-232/422/485 serial ports
- 2 x USB 3.0 ports
- 1 x HDD LED indicator
- 1 x Power LED indicator
- 1 x Power button

An overview of the front panel is shown in **Figure 1-2** below.

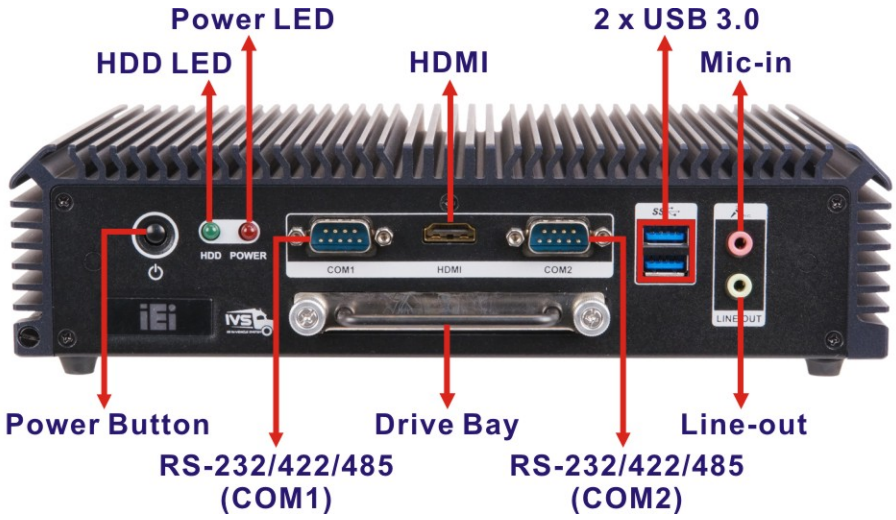

Figure 1-2: Front Panel

1.5.2 Rear Panel

The rear panel of the IVS-200-ULT2 provides access to the following external I/O connectors.

- 1 x 9 V – 36 V DC power input terminal block
- 4 x RJ-45 Ethernet connector
- 4 x D-sub reserved ports (for RS-232 or digital I/O)
- 2 x USB 2.0 port connector
- 1 x VGA connector
- 1 x AT/ATX power switch
- 1 x ACC mode on/off switch
- 1 x Reset button
- 2 x External antenna connector (optional)

An overview of the rear panel is shown in **Figure 1-3**.

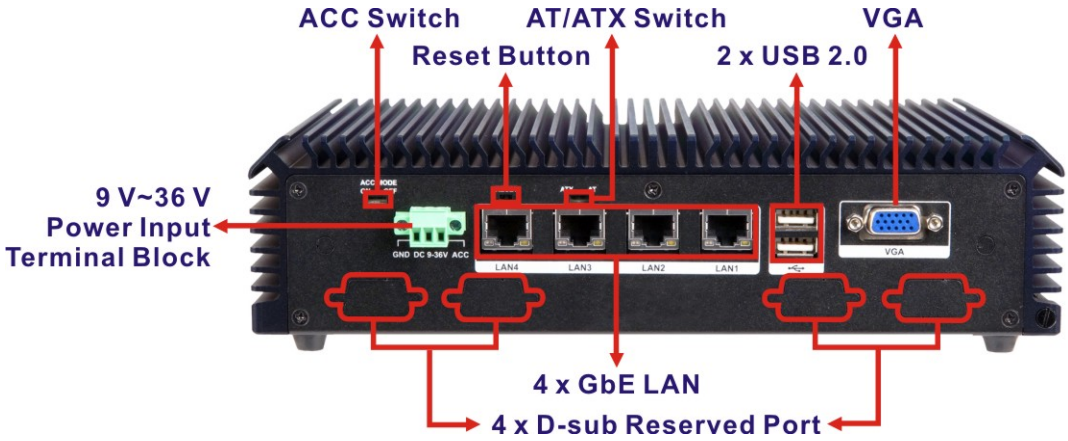

Figure 1-3: Rear Panel

1.5.3 Bottom Surface

WARNING:

Never remove the bottom access panel from the chassis while power is still being fed into the system. Before removing the bottom access panel, make sure the system has been turned off and all power connectors unplugged.

The bottom surface of the IVS-200-ULT2 contains four foot pads which can be removed to install two side mounting brackets. The surface also has four retention screw holes for the VESA MIS-D 100 wall-mount kit.

Figure 1-4: Bottom Surface

1.6 Technical Specifications

The specifications for the Intel based embedded systems are listed below.

	IVS-200-ULT2
CPU (SoC)	Intel® Core™ i5-5350U (dual-core, 1.8 GHz, 15W TDP) Intel® Celeron® 3755U (dual-core, 1.7 GHz, 15W TDP)
System Memory	2 x 204-pin DDR3 SO-DIMM slot (system max. 16 GB) Preinstalled one 4.0 GB DDR3 SDRAM SO-DIMM
Ethernet	LAN1: PCIe GbE by Intel® I218 GbE PHY LAN2: PCIe GbE by Intel® I211 Ethernet controller LAN3: PCIe GbE by Intel® I211 Ethernet controller LAN4: PCIe GbE by Intel® I211 Ethernet controller
Wireless LAN	Optional 802.11b/g/n 1T1R wireless module
WWAN	1 x SIM card slot (on-board)
Display	1 x VGA port (up to 1920x1200 @ 60 Hz) 1 x HDMI port (up to 4096x2304 @ 24 Hz)
Serial Port	2 x RS-232/422/485
USB	2 x USB 2.0 ports 2 x USB 3.0 ports
Audio	1 x Audio line-out 1 x Audio mic-in
Storage	1 x 2.5” SATA 6Gb/s SSD removable drive bay One mSATA module supported
Expansion	1 x Full-size/Half-size PCIe Mini card slot with mSATA support 1 x Full-size/Half-size PCIe Mini card slot 4 x D-sub reserved ports (for RS-232 or digital I/O)

Chassis Construction	Extruded aluminum alloy
Power Input	9 V – 36 V (±0.3 V) DC One power input terminal block
Power Consumption	12V@2.1A (with Intel® Core™ i5-5350U processor and one 4 GB DDR3 memory)
Operating Shock	Half-sine wave shock 5G; 11ms; 3 shocks per axis
Operating Vibration	MIL-STD-810F 514.5C-2 (with SSD)
Operating Temperature	-20ºC – 55ºC with air flow (with SSD)
Storage Temperature	-30ºC – 70ºC
Humidity	10% – 95%, non-condensing
Color	Black
Mounting	Mounting with two mounting brackets VESA MIS-D 100 mount
Weight (Net/Gross)	2.2 kg/3.0 kg
Dimensions (W x D x H)	255 mm x 150 mm x 63 mm
EMC	FCC, CE, E-Mark
Supported OS	Microsoft Windows Embedded 8 Microsoft Windows Embedded Standard 7

Table 1-2: Technical Specifications

1.7 Dimensions

The dimensions of the IVS-200-ULT2 are listed below and shown in **Figure 1-5**.

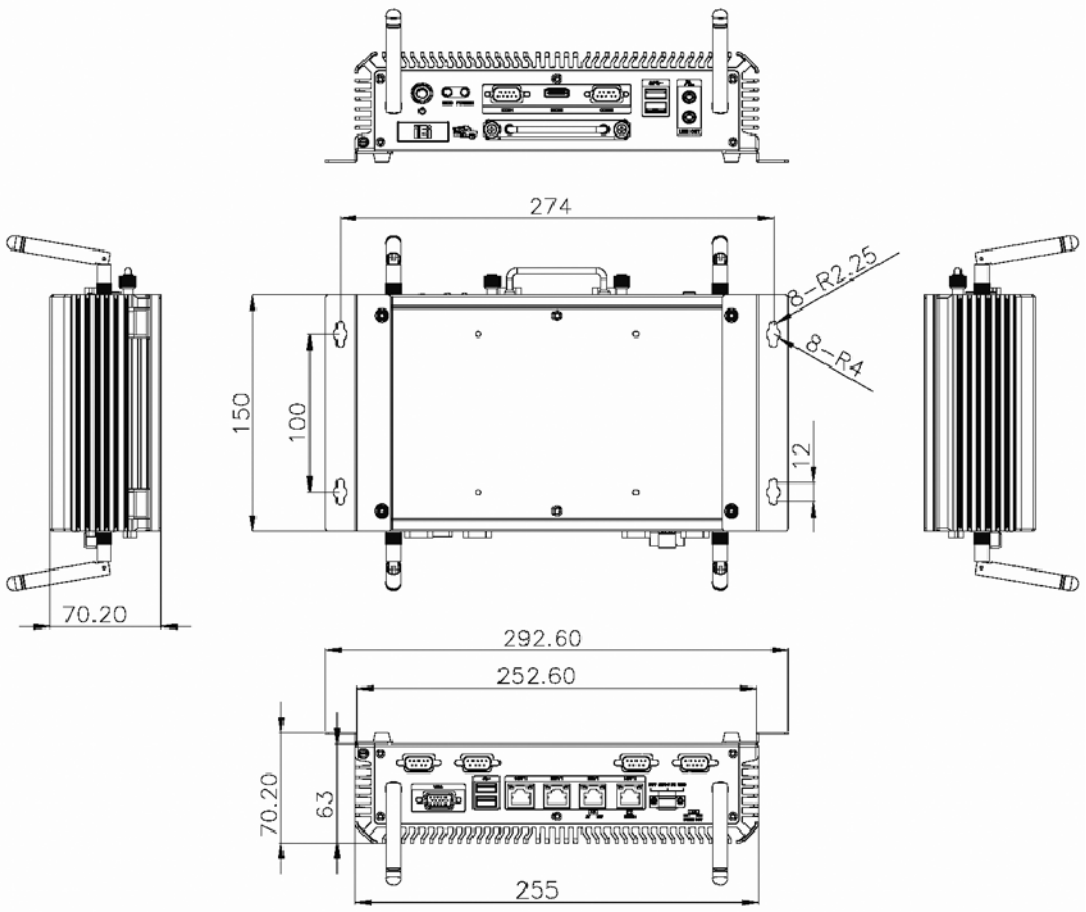

Figure 1-5: Dimensions (mm)

Chapter

2

Unpacking

2.1 Unpacking

To unpack the embedded system, follow the steps below:

Step 1: Use box cutters, a knife or a sharp pair of scissors that seals the top side of the external (second) box.

Step 2: Open the external (second) box.

Step 3: Use box cutters, a knife or a sharp pair of scissors that seals the top side of the internal (first) box.

Step 4: Lift the system out of the boxes.

Step 5: Remove both polystyrene ends, one from each side.

Step 6: Make sure all the components listed in the packing list are present.

2.2 Packing List

NOTE:

If any of the components listed in the checklist below are missing, do not proceed with the installation. Contact the IEI reseller or vendor the IVS-200-ULT2 was purchased from or contact an IEI sales representative directly by sending an email to sales@ieiworld.com.

The IVS-200-ULT2 embedded system is shipped with the following components:

Quantity	Item	Image
1	IVS-200-ULT2 embedded system	

4	Screws (M3*4) for SSD installation	
4	Screws (M3*8) for mounting brackets	
2	Mounting brackets	
1	Driver and manual CD	
1	One Key Recovery CD	

Table 2-1: Package List

2.3 Optional Items

The following are optional component(s) which may be separately purchased:

Wi-Fi kit (**P/N**: IVS-WIFI-KIT01-R10)	
RS-232 cable (150 mm) (**P/N**: 32205-005400-100-RS)	
Digital I/O cable (150 mm) (**P/N**: 32231-000100-200-RS)	

VESA MIS-D 100 wall mount kit	

Table 2-2: Optional Items

Chapter

3

Installation

3.1 Anti-static Precautions

WARNING:

Failure to take ESD precautions during the maintenance of the IVS-200-ULT2 may result in permanent damage to the IVS-200-ULT2 and severe injury to the user.

Electrostatic discharge (ESD) can cause serious damage to electronic components, including the WAFER series motherboard and the power module. (Dry climates are especially susceptible to ESD.) It is therefore critical that whenever the IVS-200-ULT2 is opened and any electrical component handled, the following anti-static precautions are strictly adhered to.

- ***Wear an anti-static wristband***: Wearing a simple anti-static wristband can help to prevent ESD from damaging the board.
- ***Self-grounding***: Before handling the board, touch any grounded conducting material. During the time the board is handled, frequently touch any conducting materials that are connected to the ground.
- ***Use an anti-static pad***: When configuring the IVS-200-ULT2, place it on an anti-static pad. This reduces the possibility of ESD damaging the IVS-200-ULT2.

3.2 Installation Precautions

During installation, be aware of the precautions below:

- **Read the user manual**: The user manual provides a complete description of the IVS-200-ULT2, installation instructions and configuration options.
- **DANGER! Disconnect Power**: Power to the IVS-200-ULT2 must be disconnected during the installation process. Failing to disconnect the power may cause severe injury to the body and/or damage to the system.
- **Qualified Personnel**: The IVS-200-ULT2 must be installed and operated only by trained and qualified personnel. Maintenance, upgrades, or repairs may

only be carried out by qualified personnel who are familiar with the associated dangers.

- **Air Circulation**: Make sure there is sufficient air circulation when installing the IVS-200-ULT2. The IVS-200-ULT2's cooling vents must not be obstructed by any objects. Blocking the vents can cause overheating of the IVS-200-ULT2. Leave at least 5 cm of clearance around the IVS-200-ULT2 to prevent overheating.
- **Grounding**: The IVS-200-ULT2 should be properly grounded. The voltage feeds must not be overloaded. Adjust the cabling and provide external overcharge protection per the electrical values indicated on the label attached to the back of the IVS-200-ULT2.

3.2.1 High Surface Temperature

WARNING:

Some surfaces of the equipment may become hot during operation.

The surface temperature may be up to several tens of degrees hotter than the ambient temperature. Under these circumstances, the equipment needs to be protected against accidental contact.

The equipment is intended for installation in a RESTRICTED ACCESS LOCATION.

- Access can only be gained by SERVICE PERSONS or by USERS who have been instructed about the reasons for the restrictions applied to the location and about any precautions that shall be taken.
- Access is through the use of a TOOL or lock and key, or other means of security, and is controlled by the authority responsible for the location.

3.3 Installation Procedure

To properly install the IVS-200-ULT2, the following steps must be followed. Detailed descriptions of these instructions are listed in the sections that follow.

Step 1: Unpacking

Step 2: Configure the jumper settings

Step 3: Install a SATA SSD

Step 4: Install an mSATA module or a PCIe Mini card

Step 5: Install the WLAN or WWAN module

Step 6: Mount the IVS-200-ULT2

Step 7: Connect the front panel peripheral connectors

Step 8: Power the system up

3.4 Opening Bottom Cover

WARNING:

Over-tightening bottom cover screws will cause damage to the bottom surface. Maximum torque for cover screws is 5 kg-cm (0.36 lb-ft/0.49 Nm).

Before the jumper settings can be configured and the hard disk drive can be installed, the bottom cover must be opened. To open the bottom cover, please follow the steps below:

Step 1: Remove the bottom cover retention screws. The bottom cover is secured to the chassis with six retention screws (four with foot pads attached). All screws and foot pads must be removed (**Figure 3-1**).

Figure 3-1: Bottom Cover Retention Screws

Step 2: Gently open the bottom cover from the side.

Figure 3-2: Opening Bottom Cover

3.5 Configure the Jumper Settings

To configure the jumper settings, please follow the steps below.

Step 1: Open the bottom cover. See **Section 3.4**.

Step 2: Locate the jumper settings on the embedded motherboard.

Step 3: Make the jumper settings in accordance with the settings described and defined in the following sections.

3.5.1 Clear CMOS

If the IVS-200-ULT2 fails to boot due to improper BIOS settings, the clear CMOS button clears the CMOS data and resets the system BIOS information. To do this, push the clear CMOS button for three seconds, and then restart the system. The clear CMOS button location is shown in **Figure 3-3**.

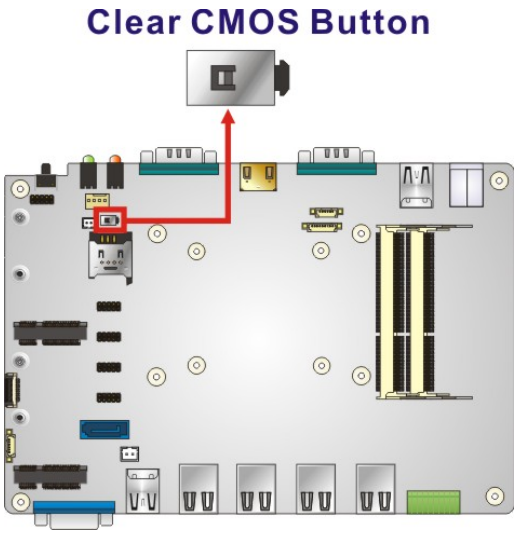

Figure 3-3: Clear CMOS Button

If the “CMOS Settings Wrong” message is displayed during the boot up process, the fault may be corrected by pressing the F1 to enter the CMOS Setup menu. Do one of the following:

- Enter the correct CMOS setting
- Load Optimal Defaults

- Load Failsafe Defaults.

After having done one of the above, save the changes and exit the CMOS Setup menu.

3.5.2 AT/ATX Mode Selection

AT or ATX power mode can be used on the IVS-200-ULT2. The selection is made through an AT/ATX switch located on the rear panel (**Figure 3-4**).

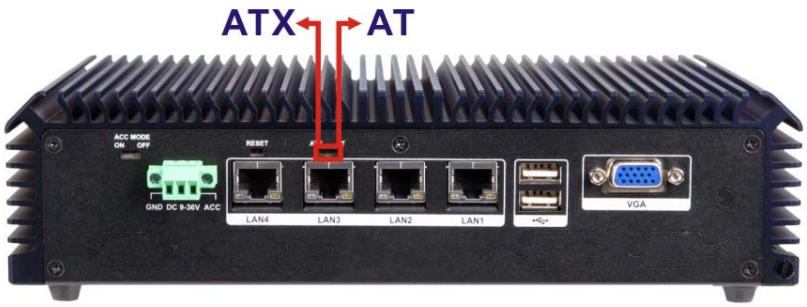

Figure 3-4: AT/ATX Mode Select Switch Location

3.5.3 ACC Mode On/Off

ACC mode can be turned on or off. The selection is made through an ACC mode on/off switch located on the rear panel (**Figure 3-4**).

Figure 3-5: ACC Mode On/Off Switch Location

3.6 Solid-State Drive Installation

One 2.5” SATA drive can be installed in the IVS-200-ULT2. The SATA drive is installed into a removable hard drive bracket on the front panel. To install the SSD into the system, please follow the steps below.

Step 1: Loose the two captive screws that secure the bracket on the front panel.

Figure 3-6: SSD Bracket Retention Screws

Step 2: Pull the bracket out to remove the bracket from the IVS-200-ULT2 (**Figure 3-7**).

Figure 3-7: Removing SSD Bracket

Step 3: Place an SSD onto the bracket and secure the SSD with the bracket by inserting four retention screws (M3*4) into the bottom of the SSD (**Figure 3-8**).

Figure 3-8: SSD Retention Screws

Step 4: Carefully insert the SSD bracket into the slot on the front panel. Make sure the SATA connector on the SSD is securely connected to the SATA connector inside the chassis.

Figure 3-9: SSD Installation

Step 5: Tighten the two captive screws to secure the HDD bracket.

3.7 mSATA/Full-size PCIe Mini Card Installation

The PCIe Mini slot allows installation of either a full-size or half-size PCIe Mini card. To install a full-size PCIe Mini card or an mSATA module, please follow the steps below.

Step 1: **Open the bottom cover**. See **Section 3.4**.

Step 2: **Locate the PCIe Mini slot**. If an mSATA module is being installed, please install it in the slot labeled M_PCIE1 as shown in **Figure 3-10**.

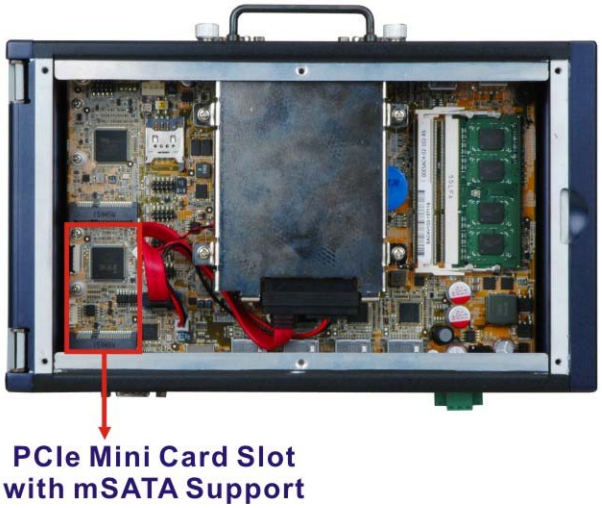

Figure 3-10: PCIe Mini Slot Location

Step 3: **Remove the retention screw and standoff for a half-size PCIe Mini card**. To avoid interference of the board circuit, remove the retention screw and standoff for a half-size PCIe Mini card as shown in **Figure 3-11**.

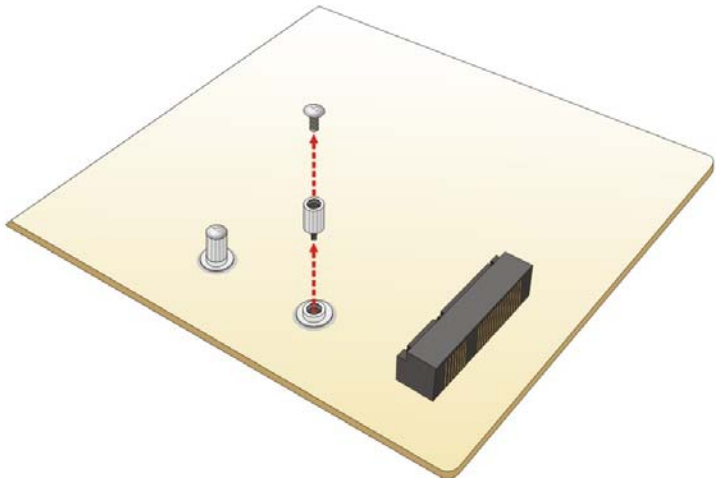

Figure 3-11: Removing the Screw and Standoff for Half-size PCIe Mini Card

Step 4: **Remove the retention screw**. Remove the retention screw as shown in **Figure 3-12**.

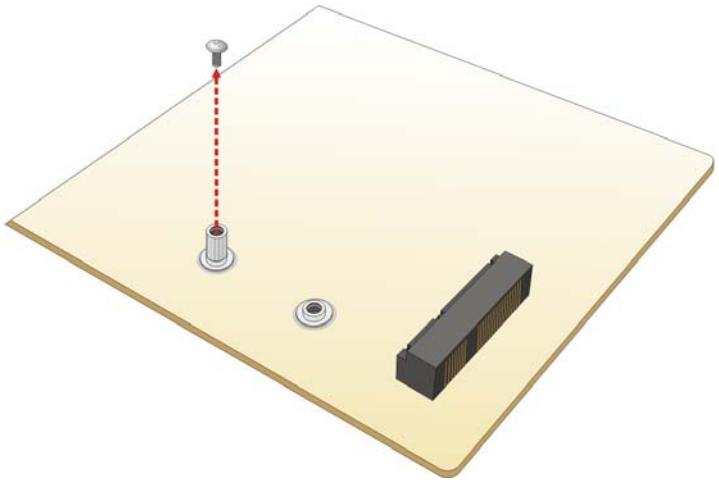

Figure 3-12: Removing the Retention Screw

Step 5: **Insert into the socket at an angle**. Line up the notch on the card with the notch on the slot. Slide the PCIe Mini card into the socket at an angle of about 20º (**Figure 3-13**).

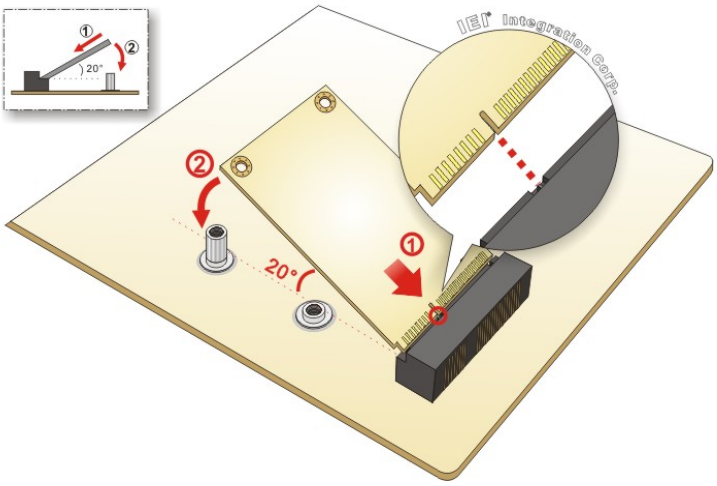

Figure 3-13: Inserting the Full-size PCIe Mini Card into the Slot at an Angle

Step 6: **Secure the full-size PCIe Mini card**. Secure the full-size PCIe Mini card with the retention screw previously removed (**Figure 3-14**).

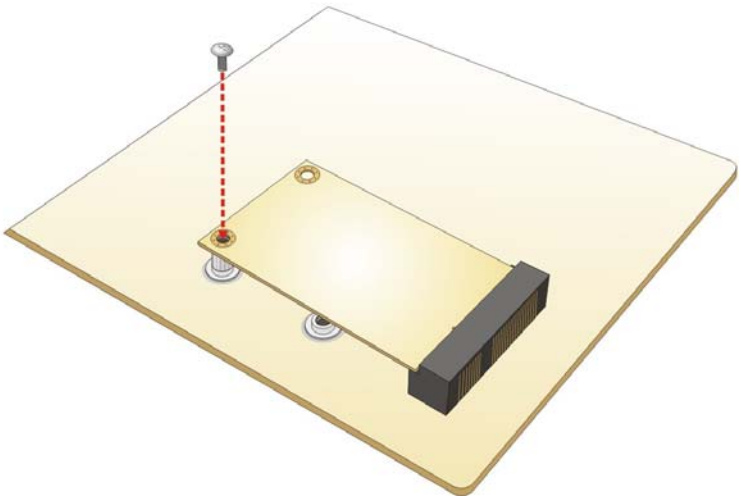

Figure 3-14: Securing the Full-size PCIe Mini Card

3.8 WLAN/WWAN Module Installation (Optional)

To install the optional WLAN or WWAN module, please follow the steps below.

Step 1: **Open the bottom cover**. See **Section 3.4**.

Step 2: **Remove one of the two knockout holes** for antenna installation. The knockout holes are located on the rear panel of the IVS-200-ULT2 as shown in **Figure 3-15**.

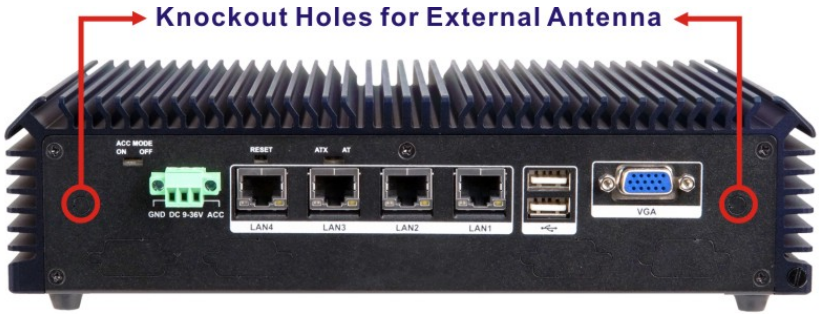

Figure 3-15: Knockout Holes for External Antenna

Step 3: **Locate the PCIe Mini slot (Figure 3-16)**.

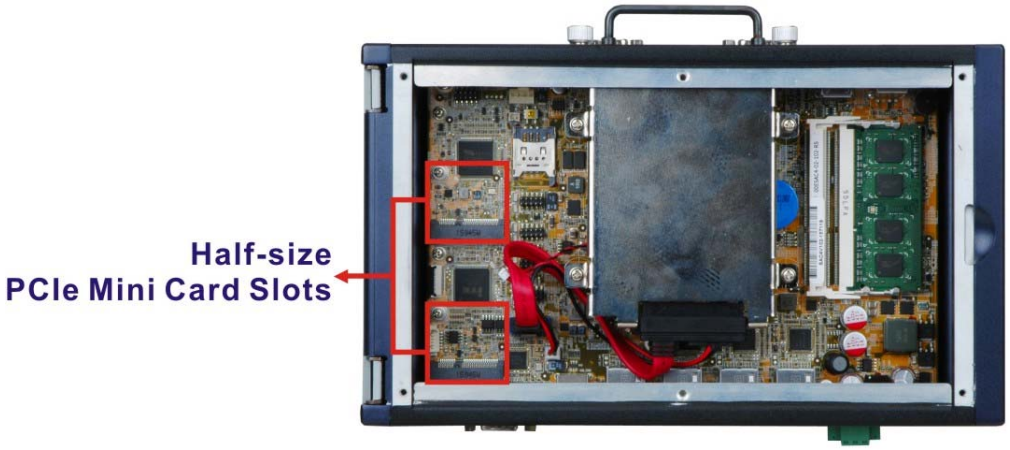

Figure 3-16: PCIe Mini Slot Location

Step 4: **Remove the retention screw.** Remove the retention screw for half-size card installation as shown in **Figure 3-17**.

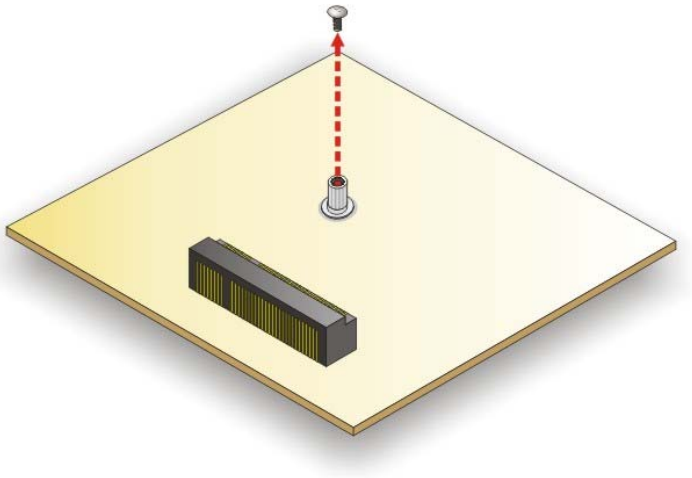

Figure 3-17: Removing the Retention Screw

Step 5: **Insert into the socket at an angle**. Line up the notch on the WLAN/WWAN module with the notch on the slot. Slide the WLAN/WWAN module into the slot at an angle of about 20º (**Figure 3-18**).

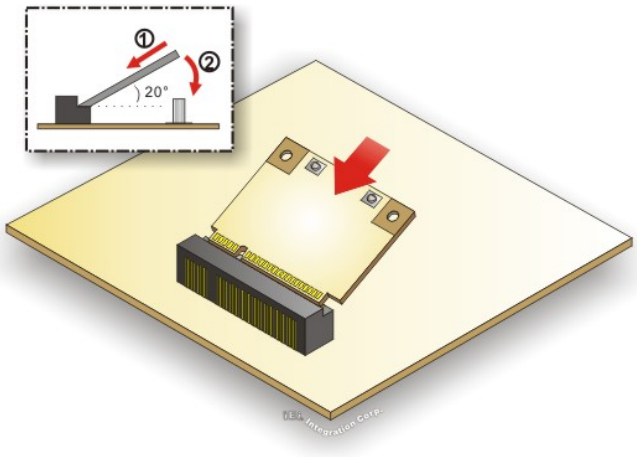

Figure 3-18: Inserting the WLAN/WWAN Module

Step 6: **Secure the WLAN/WWAN module**. Secure the WLAN/WWAN module with the retention screw previously removed (**Figure 3-19**).

Step 7: **Connect the RF cable** to the antenna connector on the WLAN/WWAN module (**Figure 3-19**).

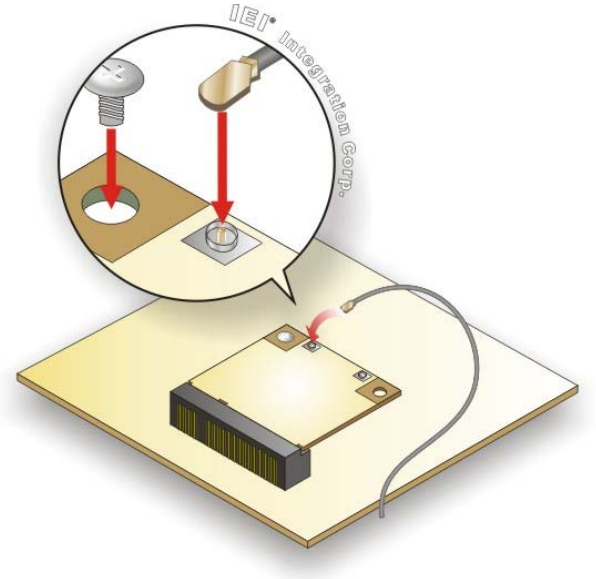

Figure 3-19: Securing WLAN/WWAN Module and Connecting RF Cable

Step 8: **Remove the nut and washer from the SMA connector** at the other end of the RF cable.

Step 9: **Insert the SMA connector** to the antenna connector hole on the rear panel.

Step 10: **Secure the SMA connector** by inserting the washer and tightening it with nut.

Step 11: **Install the external antenna**.

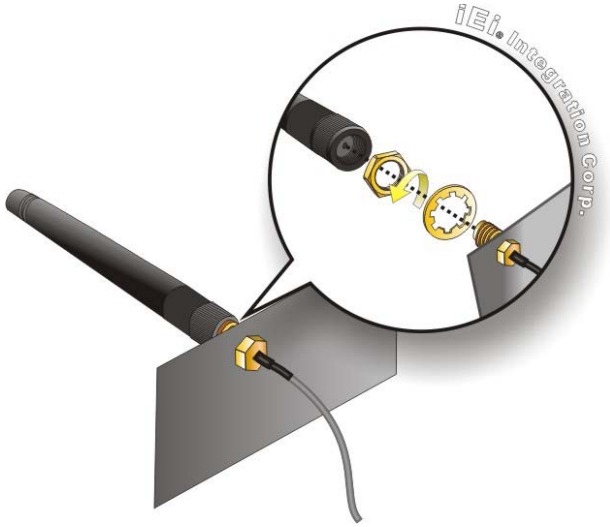

Figure 3-20: Securing SMA Connector and External Antenna Installation

3.9 SIM Card Installation (Optional)

To be able to use the 3G network connection, a SIM card must be installed in the IVS-200-ULT2. Follow the steps below to install a SIM card.

Step 1: **Open the bottom cover**. See **Section 3.4**.

Step 2: **Install a WWAN module** into the IVS-200-ULT2. See **Section 3.8**.

Step 3: **Locate the SIM card slot**.

Step 4: **Unlock the slot cover** by pushing it towards the front panel as shown in **Figure 3-21**. Then, open the slot cover.

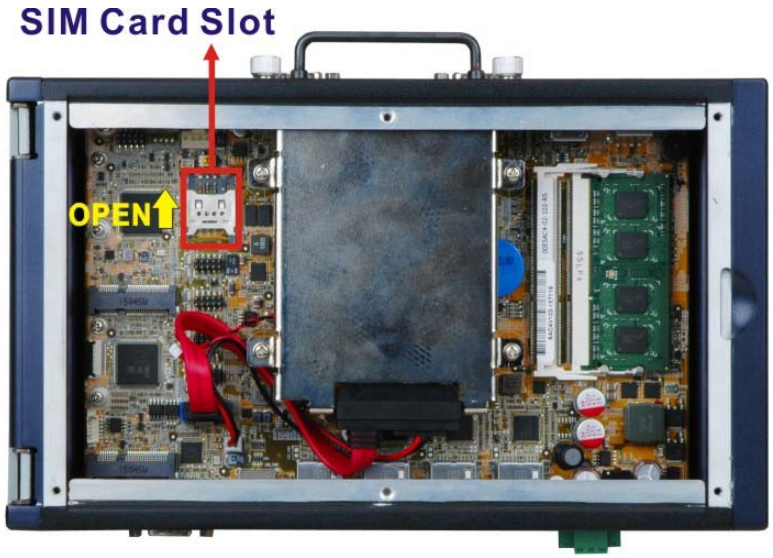

Figure 3-21: Unlock Slot Cover

Step 5: **Place a SIM card on the slot** as shown in **Figure 3-22**.

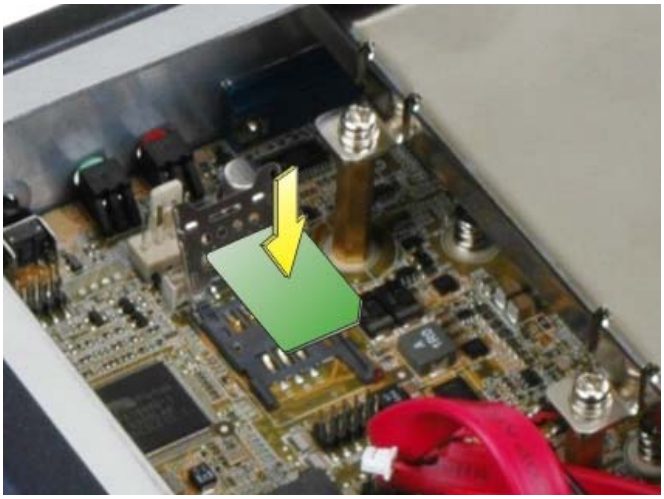

Figure 3-22: SIM Card Installation

Step 6: **Close the slot cover and lock it**.

3.10 RS-232/422/485 Serial Port Connection

The rear panel of the IVS-200-ULT2 has two D-sub 9 male connectors for RS-232/422/485 connection. The serial communication mode selection can be made through the BIOS options. Please refer to **Section 4.3.3.1** for detail information. The pinouts of the D-sub 9 connector are listed below.

Pin	RS-232	RS-422	RS-485
1	DCD	TXD422-	TXD485-
2	RX	TXD422+	TXD485+
3	TX	RXD422+	
4	DTR	RXD422-	
5	GND		
6	DSR		
7	RTS		
8	CTS		
9	RI		

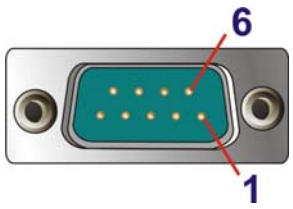

Table 3-1: COM1 and COM2 Pinouts

3.11 Mounting the System

There are two ways to mount the IVS-200-ULT2. The mounting instructions are described below.

3.11.1 Mounting with Mounting Brackets

To mount the embedded system onto a wall or some other surface using the two mounting brackets, please follow the steps below.

Step 1: Turn the embedded system over.

Step 2: Remove the four foot pads on the bottom surface by removing the retention screws (**Figure 3-23**).

Figure 3-23: Removing Foot Pads

Step 3: Align the two retention screw holes in each bracket with the retention screw holes on the sides of the bottom surface.

Step 4: Secure the brackets to the system by inserting two retention screws (M3*8) into each bracket (**Figure 3-24**).

Figure 3-24: Mounting Bracket Retention Screws

Step 5: Drill holes in the intended installation surface.

Step 6: Align the mounting holes in the sides of the mounting brackets with the predrilled holes in the mounting surface.

Step 7: Insert four retention screws, two in each bracket, to secure the system to the wall.

3.11.2 Mounting with VESA Mount Kit (Optional)

To mount the embedded system onto a wall using the optional VESA MIS-D 100 wall mount kit, please follow the steps below.

Step 1: Select the location on the wall for the wall-mounting bracket.

Step 2: Carefully mark the locations of the four bracket screw holes on the wall.

Step 3: Drill four pilot holes at the marked locations on the wall for the bracket retention screws.

Step 4: Align the wall-mounting bracket screw holes with the pilot holes.

Step 5: Secure the mounting-bracket to the wall by inserting the retention screws into the four pilot holes and tightening them (**Figure 3-25**).

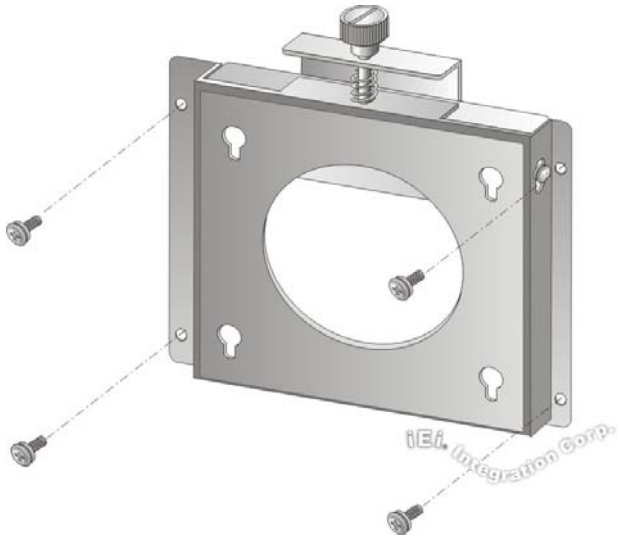

Figure 3-25: Wall-mounting Bracket

Step 6: Insert the four monitor mounting screws provided in the wall mounting kit into the four screw holes on the bottom panel of the system and tighten until the screw shank is secured against the bottom panel (**Figure 3-26**).

Step 7: Align the mounting screws on the IVS-200-ULT2 bottom panel with the mounting holes on the bracket.

Step 8: Carefully insert the screws through the holes and gently pull the monitor downwards until the IVS-200-ULT2 rests securely in the slotted holes (**Figure 3-26**). Ensure that all four of the mounting screws fit snuggly into their respective slotted holes.

NOTE:

In the diagram below the bracket is already installed on the wall.

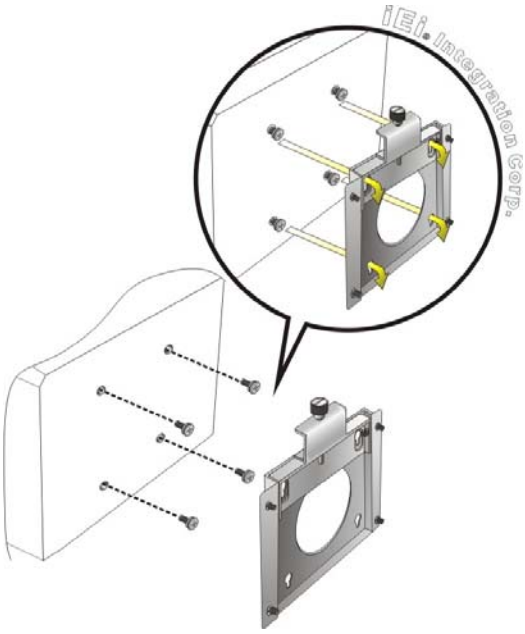

Figure 3-26: Mount the Embedded System

Step 9: Tighten the top screw on the wall mounting kit to securely hold the IVS-200-ULT2 in place (**Figure 3-27**). After this screw is tightened, the IVS-200-ULT2 should not be able to move.

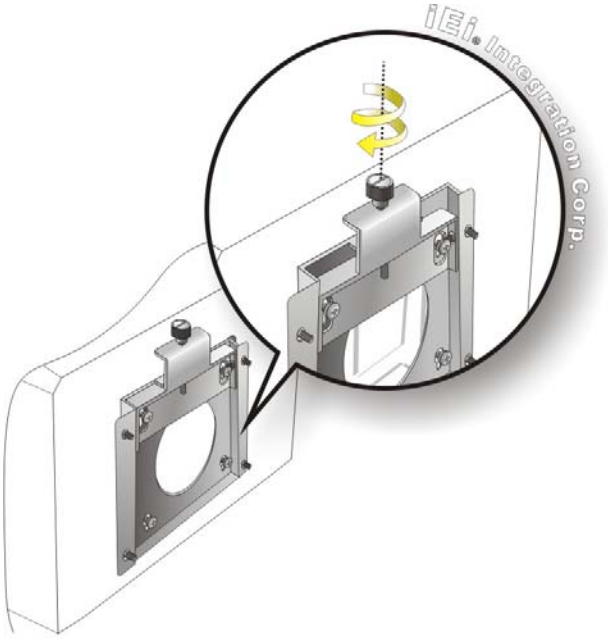

Figure 3-27: Tighten Retention Screw

3.12 Power-On Procedure

3.12.1 Installation Checklist

WARNING:

Make sure a power supply with the correct input voltage is being fed into the system. Incorrect voltages applied to the system may cause damage to the internal electronic components and may also cause injury to the user.

To power on the embedded system please make sure of the following:

- The bottom cover is installed
- All peripheral devices (VGA monitor, serial communications devices etc.) are connected
- The power cables are plugged in
- The system is securely mounted

3.12.2 Terminal Block Pinouts

The IVS-200-ULT2 has a 9 V – 36 V power input terminal block. The terminal block pinouts are shown in **Figure 3-28**.

Figure 3-28: Terminal Block Pinouts

3.12.3 Power-on Procedure

To power-on the IVS-200-ULT2 please follow the steps below:

Step 1: Connect the power source to the power input terminal block.

Step 2: Push the power button until the power LED lights on (**Figure 3-29**).

Figure 3-29: Power Button and Power LED

3.13 Driver Installation

NOTE:

The content of the CD may vary throughout the life cycle of the product and is subject to change without prior notice. Visit the IEI website or contact technical support for the latest updates.

All the drivers for the IVS-200-ULT2 are on the utility CD that came with the system. The following drivers can be installed on the system:

- Chipset
- Graphics
- LAN
- Audio
- USB 3.0

Insert the utility CD into a CD drive connected to the system and install all of the necessary drivers for the IVS-200-ULT2.

Chapter

4

BIOS

4.1 Introduction

The BIOS is programmed onto the BIOS chip. The BIOS setup program allows changes to certain system settings. This chapter outlines the options that can be changed.

NOTE:

Some of the BIOS options may vary throughout the life cycle of the product and are subject to change without prior notice.

4.1.1 Starting Setup

The UEFI BIOS is activated when the computer is turned on. The setup program can be activated in one of two ways.

1. Press the **DELETE** key as soon as the system is turned on or
2. Press the **DELETE** key when the "**Press Delete to enter SETUP**" message appears on the screen.

If the message disappears before the **DELETE** key is pressed, restart the computer and try again.

4.1.2 Using Setup

Use the arrow keys to highlight items, press **ENTER** to select, use the PageUp and PageDown keys to change entries, press **F1** for help and press **ESC** to quit. Navigation keys are shown in.

Key	Function
Up arrow	Move to the item above
Down arrow	Move to the item below
Left arrow	Move to the item on the left hand side
Right arrow	Move to the item on the right hand side
+	Increase the numeric value or make changes

Key	Function
-	Decrease the numeric value or make changes
Page up	Move to the next page
Page down	Move to the previous page
Esc	Main Menu – Quit and do not save changes into CMOS Status Page Setup Menu and Option Page Setup Menu -- Exit current page and return to Main Menu
F1 key	General help, only for Status Page Setup Menu and Option Page Setup Menu
F2 key	Load previous values
F3 key	Load optimized defaults
F4 key	Save changes and Exit BIOS

Table 4-1: BIOS Navigation Keys

4.1.3 Getting Help

When **F1** is pressed a small help window describing the appropriate keys to use and the possible selections for the highlighted item appears. To exit the Help Window press **Esc** or the **F1** key again.

4.1.4 Unable to Reboot After Configuration Changes

If the computer cannot boot after changes to the system configuration is made, clear CMOS defaults by using the clear CMOS button described in **Section 3.5.1**.

4.1.5 BIOS Menu Bar

The **menu bar** on top of the BIOS screen has the following main items:

- Main – Changes the basic system configuration.
- Advanced – Changes the advanced system settings.
- Chipset – Changes the chipset settings.
- Security – Sets User and Supervisor Passwords.
- Boot – Changes the system boot configuration.

- Save & Exit – Selects exit options and loads default settings

The following sections completely describe the configuration options found in the menu items at the top of the BIOS screen and listed above.

4.2 Main

The **Main** BIOS menu (**BIOS Menu 1**) appears when the **BIOS Setup** program is entered. The **Main** menu gives an overview of the basic system information.

```
      Aptio Setup Utility – Copyright (C) 2015 American Megatrends, Inc.
  Main   Advanced   Chipset   Security    Boot    Save & Exit

BIOS Information                                  Set the Date. Use Tab to
BIOS Vendor                    American Megatrends switch between Data
Core Version                   5.010               elements.
Compliancy                     UEFI 2.4; PI 1.3
Project Version                SEJ3AR02.ROM
Build Date and Time            07/13/2015 10:45:51

Processor Information
Name                           Broadwell ULT
Brad String                    Intel(R) Core(TM)
                               i7-5650U CPU @ 2.20GHz
Frequency                      3100 MHz
Processor ID                   306d4
Stepping                       E
Number of Processors           2Core(S)/4Thread(S)
Microcode Revision             d
GT Info                        GT3 (600 MHz)

IGFX VBIOS Version             1028
Memory RC Version              2.1.0.0
Total Memory                   4096 MB (DDR3)
Memory Frequency               1600 Mhz

PCH Information
Name                           WildcatPoint-LP
PCH SKU                        Premium SKU(BDW-U)
Stepping                       03/B2
LAN PHY Revision               B1                 ----------------------

ME FW Version                  10.0.26.1000       →←: Select Screen
ME Firmware SKU                5MB                ↑ ↓: Select Item
                                                  Enter:  Select
SPI Clock Frequency                               +/-:  Change Opt.
D0FR Support                   Supported          F1:  General Help
Read Status Clock Frequency    50 MHz             F2:  Previous Values
Write Status Clock Frequency   50 MHz             F3:  Optimized Defaults
Fast Read Status Clock Frequency 50 MHz           F4:  Save & Exit
                                                  ESC:  Exit
iWDD Vender                    iEi
iWDD Version                   SEJ3ER02.bin
```

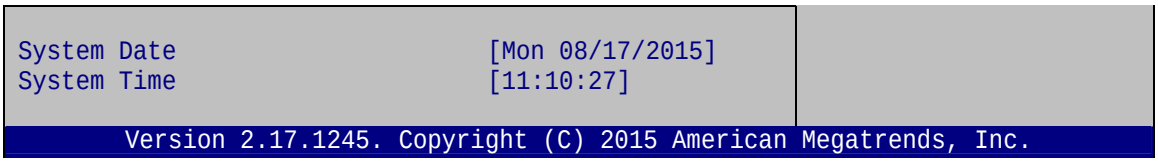

BIOS Menu 1: Main

The **Main** menu has two user configurable fields:

➔ **System Date [xx/xx/xx]**

Use the **System Date** option to set the system date. Manually enter the day, month and year.

➔ **System Time [xx:xx:xx]**

Use the **System Time** option to set the system time. Manually enter the hours, minutes and seconds.

4.3 Advanced

Use the **Advanced** menu (**BIOS Menu 2**) to configure the CPU and peripheral devices through the following sub-menus:

WARNING!

Setting the wrong values in the sections below may cause the system to malfunction. Make sure that the settings made are compatible with the hardware.

```
      Aptio Setup Utility – Copyright (C) 2015 American Megatrends, Inc.
  Main   Advanced  Chipset  Security   Boot   Save & Exit

> CPU Configuration                          System ACPI Parameters
> ACPI Settings
> F81866 Super IO Configuration
> RTC Wake Settings
> Serial Port Console Redirection            ----------------------
> iEi Feature
> SATA Configuration                         →←: Select Screen
> Intel(R) Rapid Start Technology            ↑ ↓: Select Item
> USB Configuration                          Enter: Select
> iWDD H/W Monitor                           +/-:  Change Opt.
                                             F1:  General Help
                                             F2:  Previous Values
                                             F3:  Optimized Defaults
                                             F4:  Save & Exit
                                             ESC: Exit
      Version 2.17.1245. Copyright (C) 2015 American Megatrends, Inc.
```

BIOS Menu 2: Advanced

4.3.1 CPU Configuration

Use the **CPU Configuration** menu (**BIOS Menu 3**) to view detailed CPU specifications and configure the CPU.

```
        Aptio Setup Utility – Copyright (C) 2015 American Megatrends, Inc.
          Advanced
 CPU Configuration                                  | Enabled for Windows XP and
                                                    | Linux (OS optimized for
 Intel(R) Core(R) i7-5650U CPU @ 2.20GHz            | Hyper-Threading
 CPU Signature                306d4                 | Technology) and Disabled
 Microcode Patch              d                     | for other OS (OS not
 Max CPU Speed                2200 MHz              | optimized for
 Min CPU Speed                500 MHz               | Hyper-Threading
 CPU Speed                    3100 MHz              | Technology). When
 Processor Cores              2                     | Disabled only on thread per
 Intel HT Technology          Supported             | enabled core is enabled.
 Intel VT-x Technology        Supported             |
 Intel SMX Technology         Supported             |
 64-bit                       Supported             |
 EIST Technology              Supported             |
 CPU C3 State                 Supported             |
 CPU C6 State                 Supported             |
 CPU C7 State                 Supported             | ----------------------
                                                    |
 L1 Data Cache                32 KB x 2             | →←: Select Screen
 L1 Code Cache                32 KB x 2             | ↑ ↓: Select Item
 L2 Cache                     256 KB x 2            | Enter: Select
 L3 Cache                     4 MB                  | +/-: Change Opt.
 L3 Cache                     Not Present           | F1: General Help
                                                    | F2: Previous Values
 Hyper-threading              [Enabled]             | F3: Optimized Defaults
 Active Processor Cores       [All]                 | F4: Save & Exit
 Intel Virtualization Technology [Enabled]          | ESC: Exit
 EIST                         [Enabled]             |
 Intel TXT(LT) Support        [Disabled]            |
        Version 2.17.1245. Copyright (C) 2015 American Megatrends, Inc.
```

BIOS Menu 3: CPU Configuration

The CPU Configuration menu (**BIOS Menu 3**) lists the following CPU details:

- CPU Signature: Lists the CPU signature value.
- Microcode Patch: Lists the microcode patch being used.
- Max CPU Speed: Lists the maximum CPU processing speed.
- Min CPU Speed: Lists the minimum CPU processing speed.
- CPU Speed: Lists the CPU speed.

- Processor Cores: Lists the number of the processor core
- Intel HT Technology: Indicates if Intel HT Technology is supported by the CPU.
- Intel VT-x Technology: Indicates if Intel VT-x Technology is supported by the CPU.
- Intel SMX Technology: Indicates if Intel SMX Technology is supported by the CPU.
- 64-bit: Indicates if 64-bit system is supported by the CPU.
- Intel EIST Technology: Indicates if Intel SpeedStep Technology is supported by the CPU.
- CPU C3 state: Indicates if the C3 state is supported by the CPU.
- CPU C6 state: Indicates if the C6 state is supported by the CPU.
- CPU C7 state: Indicates if the C7 state is supported by the CPU.
- L1 Data Cache: Lists the amount of data storage space on the L1 cache.
- L1 Code Cache: Lists the amount of code storage space on the L1 cache.
- L2 Cache: Lists the amount of storage space on the L2 cache.
- L3 Cache: Lists the amount of storage space on the L3 cache.
- L4 Cache: Lists the amount of storage space on the L4 cache.

➔ **Hyper-threading [Enabled]**

Use the **Hyper-threading** BIOS option to enable or disable the Intel Hyper-Threading Technology.

➔ **Disabled** Disables the Intel Hyper-Threading Technology.

➔ **Enabled** **DEFAULT** Enables the Intel Hyper-Threading Technology.

➔ **Active Processor Cores [All]**

Use the **Active Processor Cores** BIOS option to enable numbers of cores in the processor package.

➔ **All** **DEFAULT** Enable all cores in the processor package.

➔ **1** Enable one core in the processor package.

➔ **Intel Virtualization Technology [Enabled]**

Use the **Intel Virtualization Technology** option to enable or disable virtualization on the system. When combined with third party software, Intel® Virtualization technology allows several OSs to run on the same system at the same time.

➔ **Disabled**		Disables Intel Virtualization Technology.
➔ **Enabled**	**DEFAULT**	Enables Intel Virtualization Technology.

➔ **EIST [Enabled]**

Use the **EIST** option to enable or disable the Enhanced Intel® SpeedStep Technology (EIST).

➔ **Disabled**		Disables Enhanced Intel® SpeedStep Technology
➔ **Enabled**	**DEFAULT**	Enables Enhanced Intel® SpeedStep Technology

➔ **Intel TXT(LT) Support [Disabled]**

Use the **Intel TXT(LT) Support** option to enable or disable the Intel Trusted Execution Technology.

➔ **Disabled**	**DEFAULT**	Disables Intel Trusted Execution Technology.
➔ **Enabled**		Enables Intel Trusted Execution Technology.

4.3.2 ACPI Settings

The **ACPI Settings** menu (**BIOS Menu 4**) configures the Advanced Configuration and Power Interface (ACPI) options.

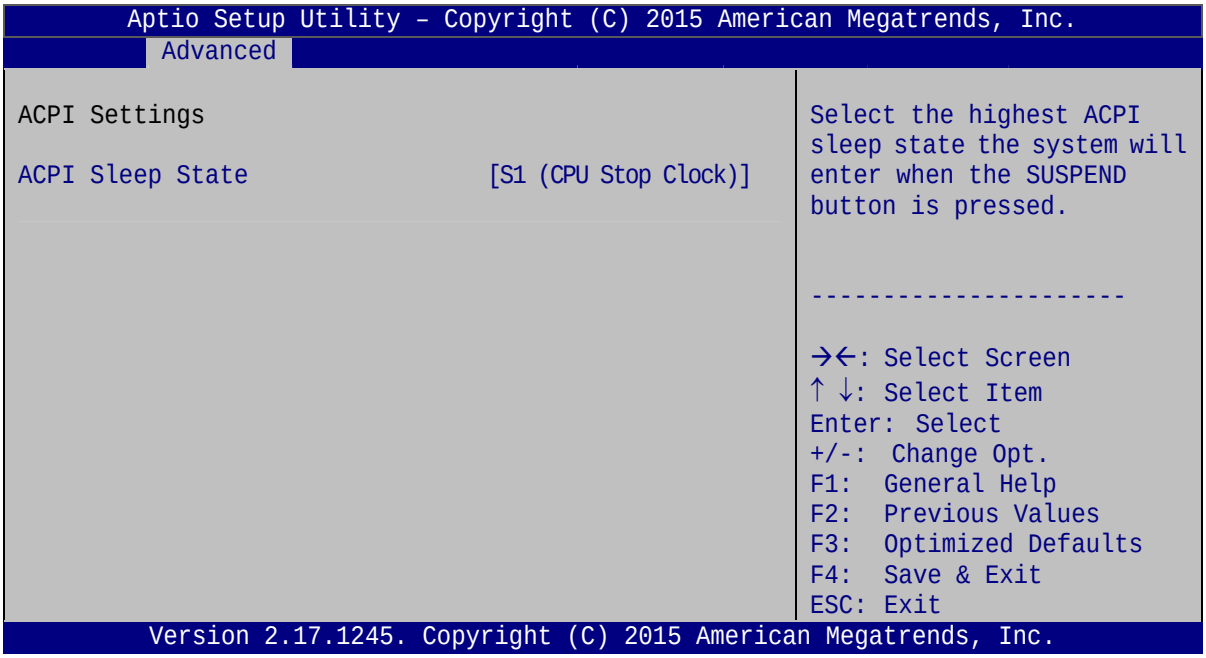

BIOS Menu 4: ACPI Settings

➔ **ACPI Sleep State [S1 (CPU Stop Clock)]**

Use the **ACPI Sleep State** option to specify the sleep state the system enters when it is not being used.

➔ **S1 (CPU Stop Clock)** **DEFAULT**	The system enters S1 (POS) sleep state. The system appears off. The CPU is stopped; RAM is refreshed; the system is running in a low power mode.
➔ **S3 only (Suspend to RAM)**	The caches are flushed and the CPU is powered off. Power to the RAM is maintained. The computer returns slower to a working state, but more power is saved.

4.3.3 F81866 Super IO Configuration

Use the **F81866 Super IO Configuration** menu (**BIOS Menu 5**) to set or change the configurations for the serial ports.

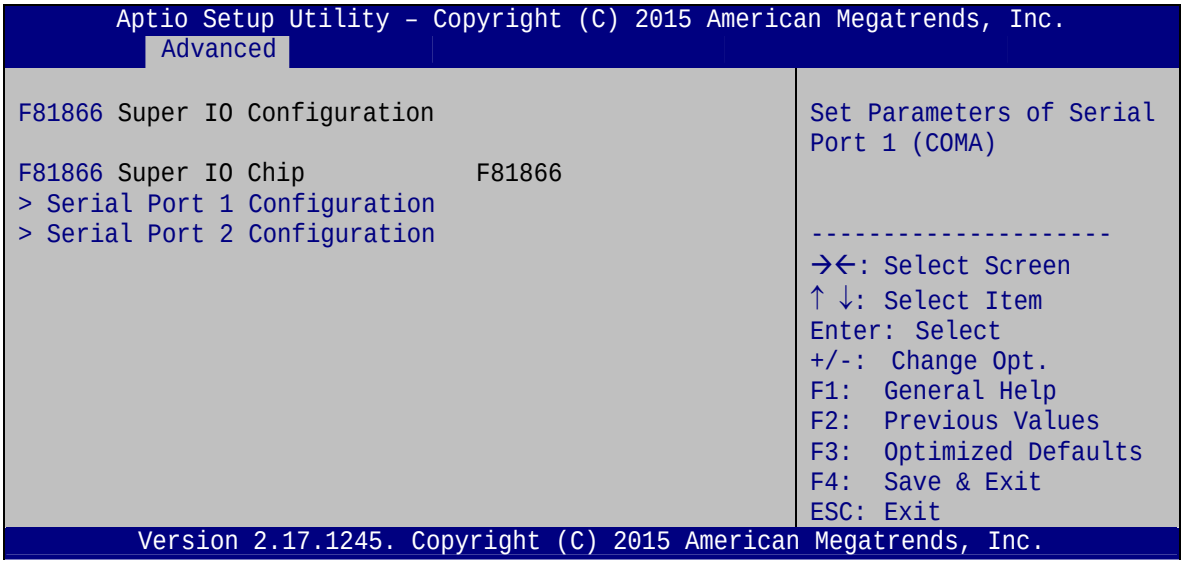

BIOS Menu 5: F81866 Super IO Configuration

4.3.3.1 Serial Port n Configuration

Use the **Serial Port n Configuration** menu (**BIOS Menu 6**) to configure the serial port n.

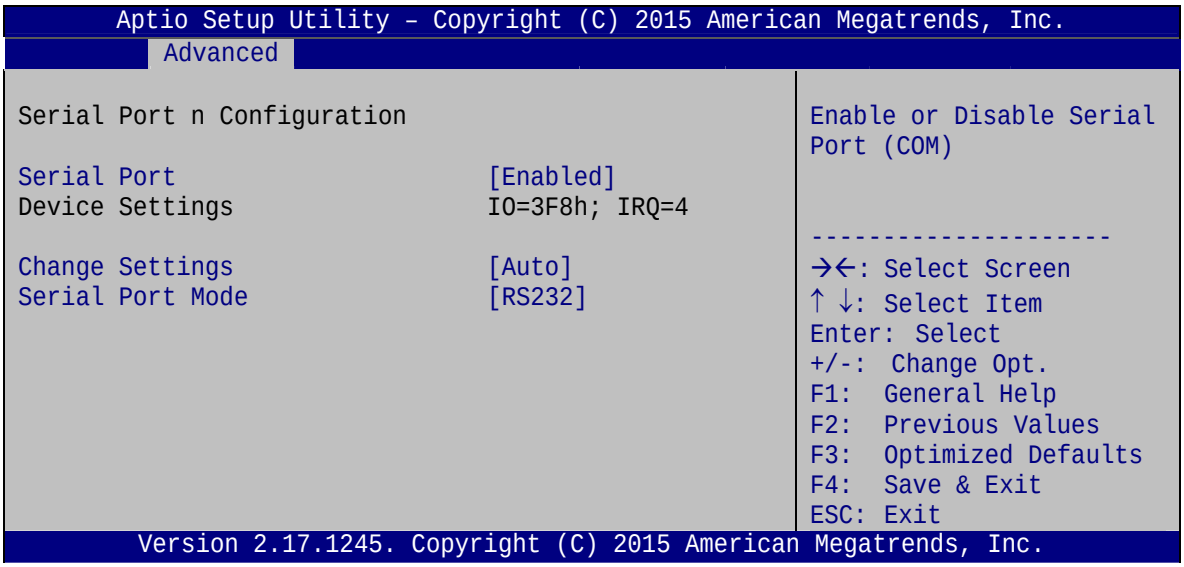

BIOS Menu 6: Serial Port n Configuration Menu

4.3.3.1.1 Serial Port 1 Configuration

➔ **Serial Port [Enabled]**

Use the **Serial Port** option to enable or disable the serial port.

➔ **Disabled**		Disable the serial port
➔ **Enabled**	**DEFAULT**	Enable the serial port

➔ **Change Settings [Auto]**

Use the **Change Settings** option to change the serial port IO port address and interrupt address.

➔ **Auto**	**DEFAULT**	The serial port IO port address and interrupt address are automatically detected.
➔ **IO=3F8h; IRQ=4**		Serial Port I/O port address is 3F8h and the interrupt address is IRQ4
➔ **IO=3F8h; IRQ=3, 4, 7, 9, 10, 11**		Serial Port I/O port address is 3F8h and the interrupt address is IRQ3, 4, 7, 9, 10, 11
➔ **IO=2F8h; IRQ=3, 4, 7, 9, 10, 11**		Serial Port I/O port address is 2F8h and the interrupt address is IRQ3, 4, 7, 9, 10, 11
➔ **IO=3E8h; IRQ=3, 4, 7, 9, 10, 11**		Serial Port I/O port address is 3E8h and the interrupt address is IRQ3, 4, 7, 9, 10, 11
➔ **IO=2E8h; IRQ=3, 4, 7, 9, 10, 11**		Serial Port I/O port address is 2E8h and the interrupt address is IRQ3, 4, 7, 9, 10, 11

➔ **Serial Port Mode [RS232]**

Use the **Serial Port Mode** option to select the Serial Port 1 signaling mode.

➔ **RS232**	**DEFAULT**	Serial Port 1 signaling mode is RS-232
➔ **RS422**		Serial Port 1 signaling mode is RS-422
➔ **RS485**		Serial Port 1 signaling mode is RS-485

4.3.3.1.2 Serial Port 2 Configuration

➔ **Serial Port [Enabled]**

Use the **Serial Port** option to enable or disable the serial port.

➔ **Disabled**		Disable the serial port
➔ **Enabled**	**DEFAULT**	Enable the serial port

➔ **Change Settings [Auto]**

Use the **Change Settings** option to change the serial port IO port address and interrupt address.

➔ **Auto**	**DEFAULT**	The serial port IO port address and interrupt address are automatically detected.
➔ **IO=2F8h; IRQ=3**		Serial Port I/O port address is 2F8h and the interrupt address is IRQ3
➔ **IO=3F8h; IRQ=3, 4, 7, 9, 10, 11**		Serial Port I/O port address is 3F8h and the interrupt address is IRQ3, 4, 7, 9, 10, 11
➔ **IO=2F8h; IRQ=3, 4, 7, 9, 10, 11**		Serial Port I/O port address is 2F8h and the interrupt address is IRQ3, 4, 7, 9, 10, 11

➔ **IO=3E8h; IRQ=3, 4, 7, 9, 10, 11**	Serial Port I/O port address is 3E8h and the interrupt address is IRQ3, 4, 7, 9, 10, 11
➔ **IO=2E8h; IRQ=3, 4, 7, 9, 10, 11**	Serial Port I/O port address is 2E8h and the interrupt address is IRQ3, 4, 7, 9, 10, 11

➔ **Serial Port Mode [RS232]**

Use the **Serial Port Mode** option to select the Serial Port 2 signaling mode.

➔ **RS232**	**DEFAULT**	Serial Port 2 signaling mode is RS-232
➔ **RS422**		Serial Port 2 signaling mode is RS-422
➔ **RS485**		Serial Port 2 signaling mode is RS-485

4.3.4 RTC Wake Settings

The **RTC Wake Settings** menu (**BIOS Menu 7**) enables the system to wake at the specified time.

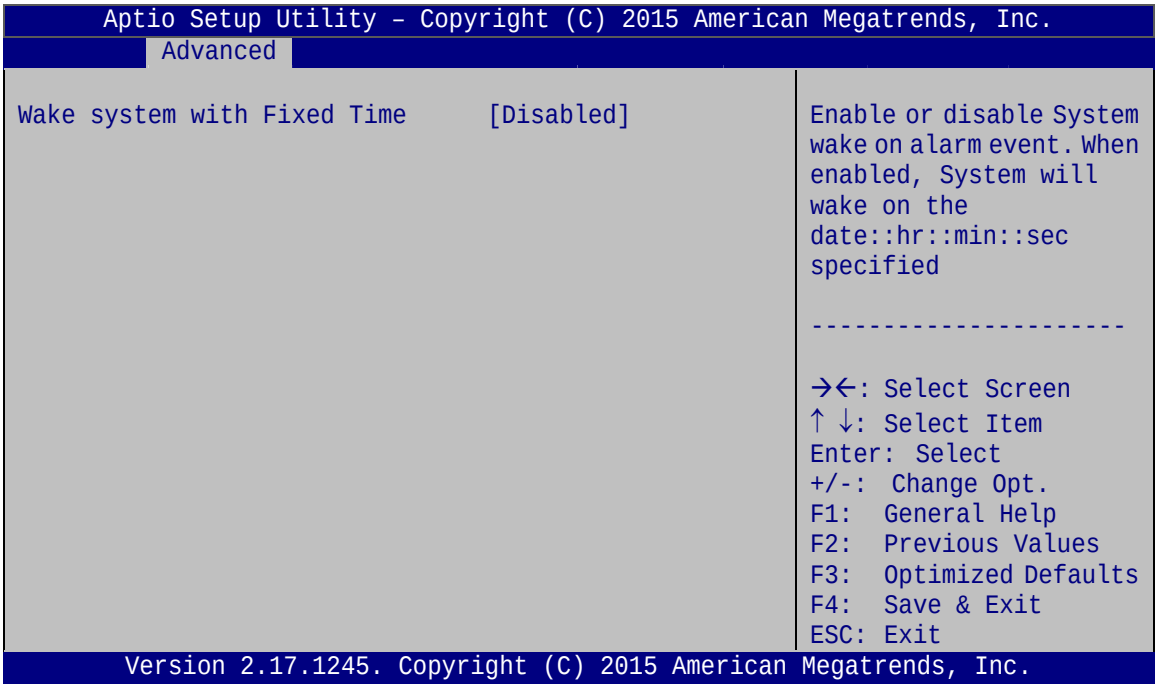

BIOS Menu 7: RTC Wake Settings

➔ **Wake system with Fixed Time [Disabled]**

Use the **Wake system with Fixed Time** option to enable or disable the system wake on alarm event.

➔ **Disabled** **DEFAULT** The real time clock (RTC) cannot generate a wake event

➔ **Enabled** If selected, the **Wake up every day** option appears allowing you to enable to disable the system to wake every day at the specified time. Besides, the following options appear with values that can be selected:

Wake up date

Wake up hour

Wake up minute

Wake up second

After setting the alarm, the computer turns itself on from a suspend state when the alarm goes off.

4.3.5 Serial Port Console Redirection

The **Serial Port Console Redirection** menu (**BIOS Menu 8**) allows the console redirection options to be configured. Console redirection allows users to maintain a system remotely by re-directing keyboard input and text output through the serial port.

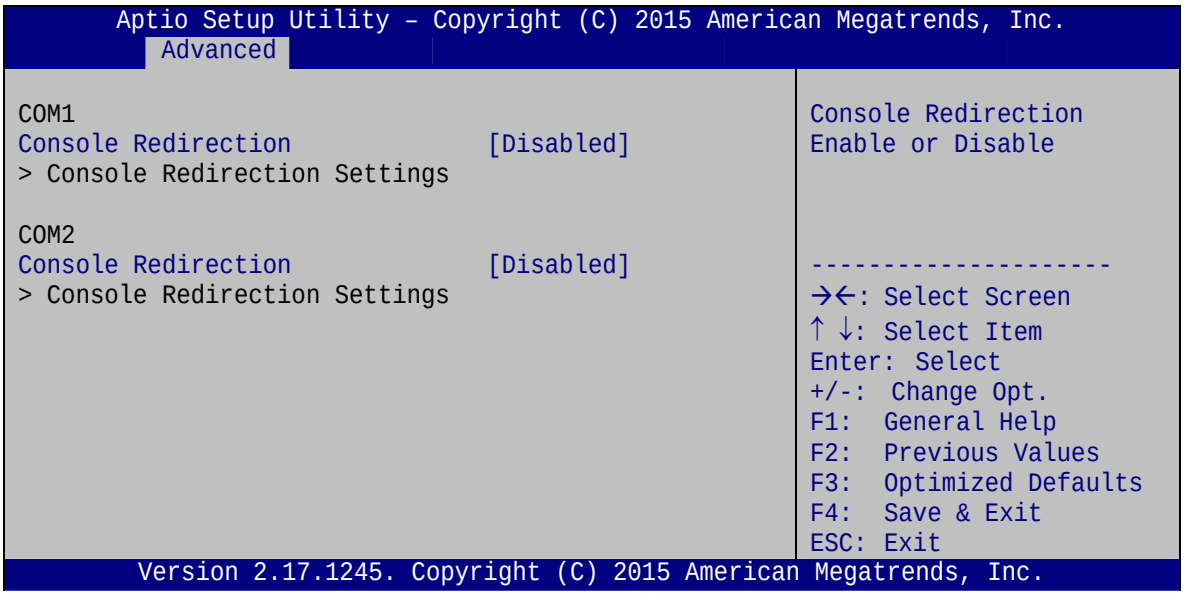

BIOS Menu 8: Serial Port Console Redirection

➔ **Console Redirection [Disabled]**

Use **Console Redirection** option to enable or disable the console redirection function.

➔ **Disabled** **DEFAULT** Disabled the console redirection function

➔ **Enabled** Enabled the console redirection function

4.3.5.1 Console Redirection Settings

Use the **Console Redirection Settings** menu (**BIOS Menu 9**) to configure console redirection settings of the specified serial port. This menu appears only when the Console Redirection is enabled.

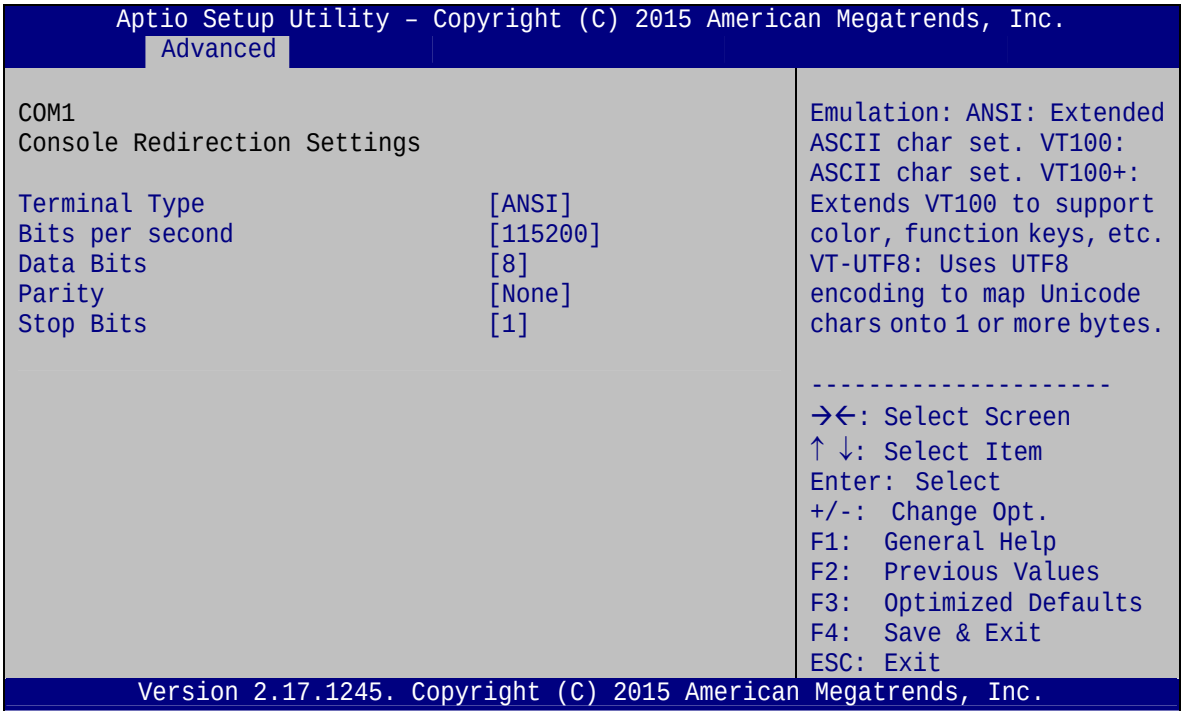

BIOS Menu 9: Console Redirection Settings

➔ **Terminal Type [ANSI]**

Use the **Terminal Type** option to specify the remote terminal type.

- ➔ **VT100** — The target terminal type is VT100
- ➔ **VT100+** — The target terminal type is VT100+
- ➔ **VT-UTF8** — The target terminal type is VT-UTF8
- ➔ **ANSI** **DEFAULT** — The target terminal type is ANSI

➔ **Bits per second [115200]**

Use the **Bits per second** option to specify the serial port transmission speed. The speed must match the other side. Long or noisy lines may require lower speeds.

- ➔ **9600** — Sets the serial port transmission speed at 9600.
- ➔ **19200** — Sets the serial port transmission speed at 19200.
- ➔ **38400** — Sets the serial port transmission speed at 39400.
- ➔ **57600** — Sets the serial port transmission speed at 57600.
- ➔ **115200** **DEFAULT** — Sets the serial port transmission speed at 115200.

➔ **Data Bits [8]**

Use the **Data Bits** option to specify the number of data bits.

- ➔ **7** — Sets the data bits at 7.
- ➔ **8** **DEFAULT** — Sets the data bits at 8.

➔ **Parity [None]**

Use the **Parity** option to specify the parity bit that can be sent with the data bits for detecting the transmission errors.

- ➔ **None** **DEFAULT** — No parity bit is sent with the data bits.
- ➔ **Even** — The parity bit is 0 if the number of ones in the data bits is even.
- ➔ **Odd** — The parity bit is 0 if the number of ones in the data bits is odd.
- ➔ **Mark** — The parity bit is always 1. This option does not provide error detection.
- ➔ **Space** — The parity bit is always 0. This option does not provide error detection.

➔ **Stop Bits [1]**

Use the **Stop Bits** option to specify the number of stop bits used to indicate the end of a serial data packet. Communication with slow devices may require more than 1 stop bit.

➔ **1** **DEFAULT** Sets the number of stop bits at 1.

➔ **2** Sets the number of stop bits at 2.

4.3.6 iEi Feature

Use the **iEi Feature** menu (**BIOS Menu 10**) to configure One Key Recovery function.

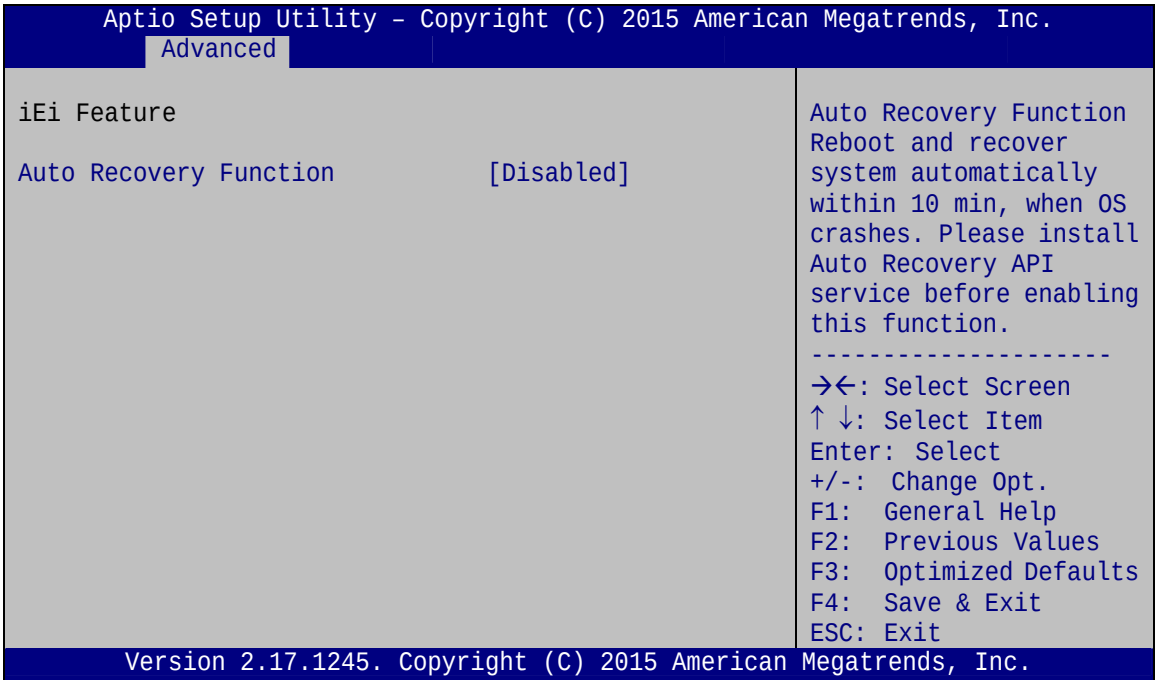

BIOS Menu 10: iEi Feature

➔ **Auto Recovery Function [Disabled]**

Use the **Auto Recovery Function** BIOS option to enable or disable the auto recovery function of the IEI One Key Recovery.

➔ **Disabled** **DEFAULT** Auto recovery function disabled

➔ **Enabled** Auto recovery function enabled

4.3.7 SATA Configuration

Use the **SATA Configuration** menu (**BIOS Menu 11**) to change and/or set the configuration of the SATA devices installed in the system.

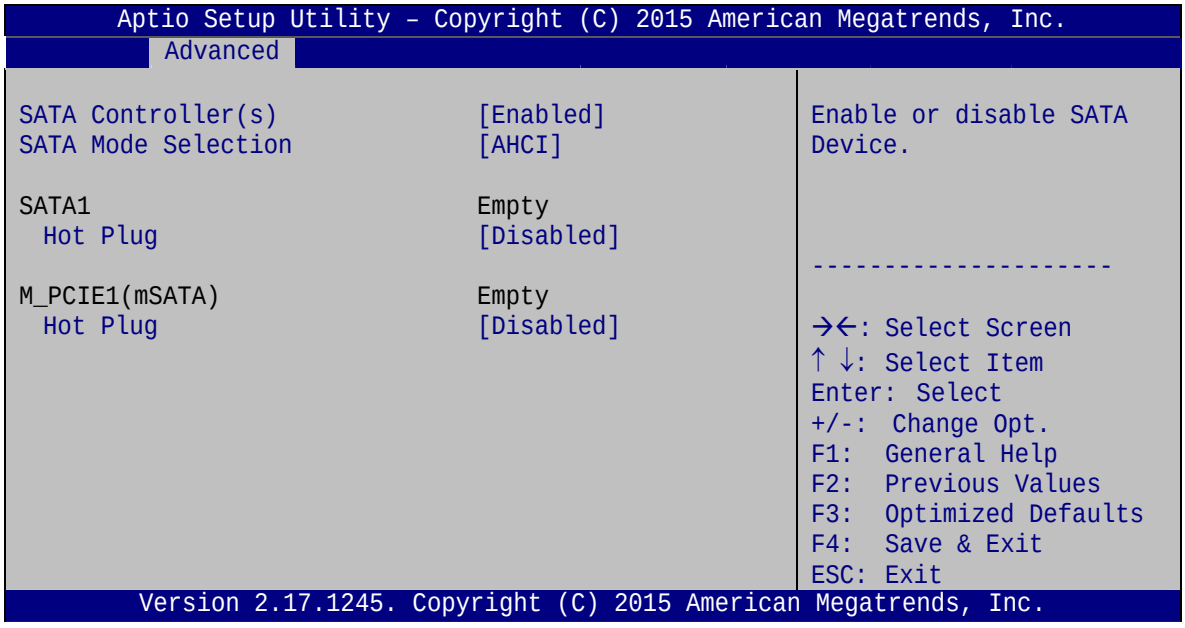

BIOS Menu 11: SATA Configuration

➔ **SATA Controller(s) [Enabled]**

Use the **SATA Controller(s)** option to configure the SATA controller.

- ➔ **Enabled** **DEFAULT** Enable SATA controller.
- ➔ **Disabled** Disable SATA controller.

➔ **SATA Mode Selection [AHCI]**

Use the **SATA Mode Selection** option to determine how SATA devices operate.

- ➔ **AHCI** **DEFAULT** Configures SATA devices as AHCI device.
- ➔ **RAID** Configures SATA devices as RAID device.

➔ **Hot Plug [Disabled]**

Use the **Hot Plug** option to enable or disable the hot plug function of the SATA port.

➔ **Disabled** **DEFAULT** Disables the hot plug function of the SATA port.

➔ **Enabled** Enables the hot plug function of the SATA port.

4.3.8 Intel(R) Rapid Start Technology

Use the **Intel(R) Rapid Start Technology** menu (**BIOS Menu 12**) to configure Intel® Rapid Start Technology support.

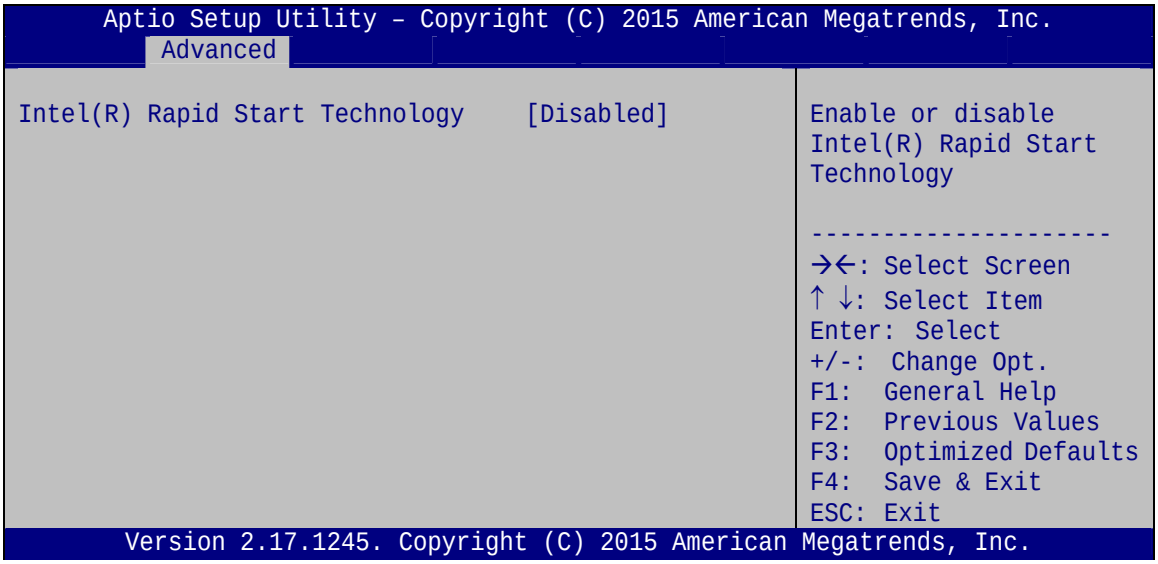

BIOS Menu 12: Intel(R) Rapid Start Technology Configuration

➔ **Intel(R) Rapid Start Technology [Disabled]**

Use **Intel(R) Rapid Start Technology** option to enable or disable the Intel® Rapid Start Technology function.

➔ **Disabled** **DEFAULT** Intel® Rapid Start Technology is disabled

➔ **Enabled** Intel® Rapid Start Technology is enabled

4.3.9 USB Configuration

Use the **USB Configuration** menu (**BIOS Menu 13**) to read USB configuration information and configure the USB settings.

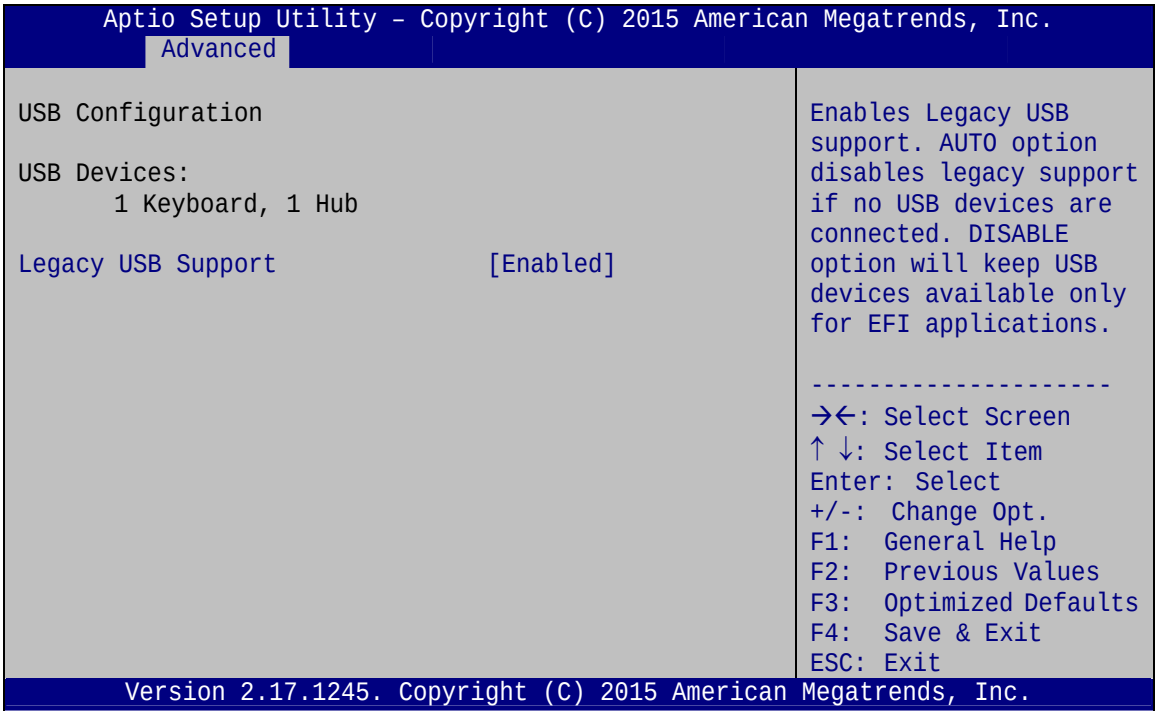

BIOS Menu 13: USB Configuration

➔ **USB Devices**

The **USB Devices** field lists the USB devices that are enabled on the system

➔ **Legacy USB Support [Enabled]**

Use the **Legacy USB Support** BIOS option to enable USB mouse and USB keyboard support. Normally if this option is not enabled, any attached USB mouse or USB keyboard does not become available until a USB compatible operating system is fully booted with all USB drivers loaded. When this option is enabled, any attached USB mouse or USB keyboard can control the system even when there is no USB driver loaded onto the system.

➔	**Enabled**	**DEFAULT**	Legacy USB support enabled
➔	**Disabled**		Legacy USB support disabled
➔	**Auto**		Legacy USB support disabled if no USB devices are connected

4.3.10 iWDD H/W Monitor

The **iWDD H/W Monitor** menu (**BIOS Menu 14**) displays operating temperature and fan speeds.

```
        Aptio Setup Utility – Copyright (C) 2015 American Megatrends, Inc.
            Advanced

PC Health Status

CPU temperature                  : +55 °C

+VCC_CORE                        : +1.798 V
+V5S                             : +5.084 V
+V12S                            : +11.869 V
VDDR                             : +1.512 V
DCIN_R                           : +11.991 V
+V3.3S                           : +3.312 V

                                                  --------------------
                                                  →←: Select Screen
                                                  ↑ ↓: Select Item
                                                  Enter: Select
                                                  +/-:  Change Opt.
                                                  F1:   General Help
                                                  F2:   Previous Values
                                                  F3:   Optimized Defaults
                                                  F4:   Save & Exit
                                                  ESC:  Exit
         Version 2.17.1245. Copyright (C) 2015 American Megatrends, Inc.
```

BIOS Menu 14: iWDD H/W Monitor

➔ **PC Health Status**

The following system parameters and values are shown. The system parameters that are monitored are:

- CPU Temperature
- Voltages:
  - +VCC_CORE
  - +V5S
  - +V12S
  - VDDR

- DCIN_R
- +V3.3S

4.4 Chipset

Use the **Chipset** menu (**BIOS Menu 15**) to access the PCH-IO and System Agent (SA) configuration menus.

WARNING!

Setting the wrong values for the Chipset BIOS selections in the Chipset BIOS menu may cause the system to malfunction.

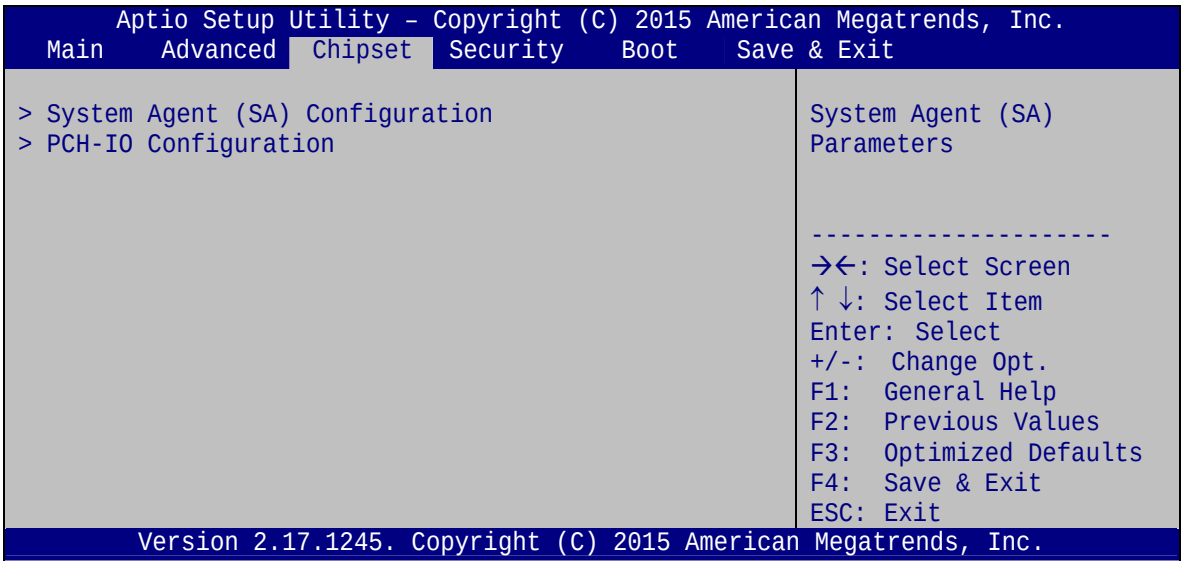

BIOS Menu 15: Chipset

4.4.1 System Agent (SA) Configuration

Use the **System Agent (SA) Configuration** menu (**BIOS Menu 16**) to configure the System Agent (SA) parameters.

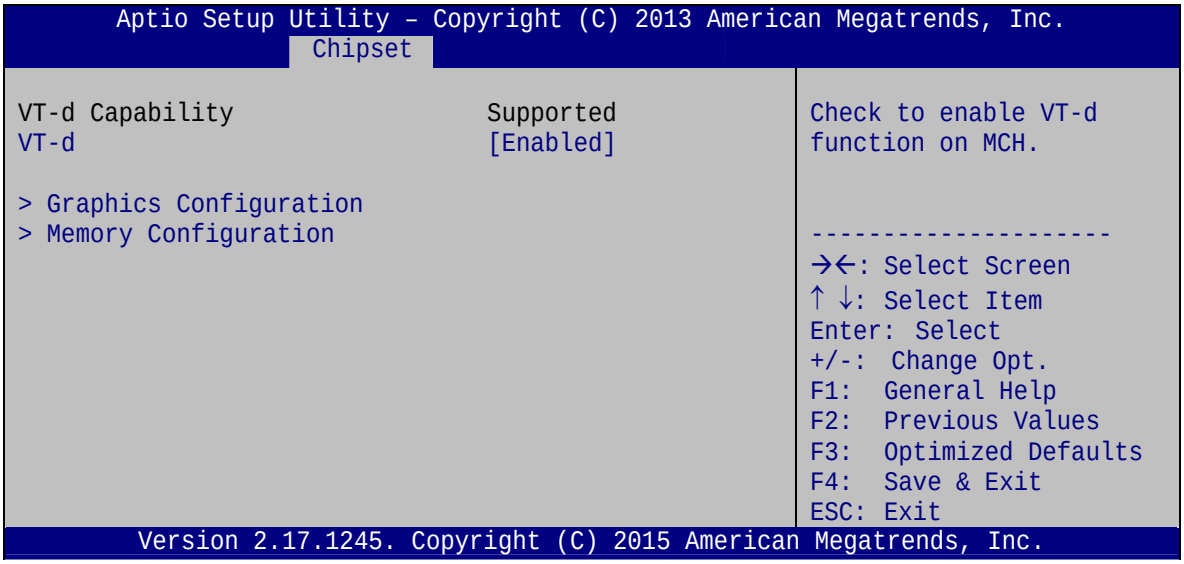

BIOS Menu 16: System Agent (SA) Configuration

➔ **VT-d [Enabled]**

Use the **VT-d** option to enable or disable VT-d support.

➔	**Disabled**		Disables VT-d support.
➔	**Enabled**	**DEFAULT**	Enables VT-d support.

4.4.1.1 Graphics Configuration

Use the **Graphics Configuration** submenu (**BIOS Menu 17**) to configure the graphics settings.

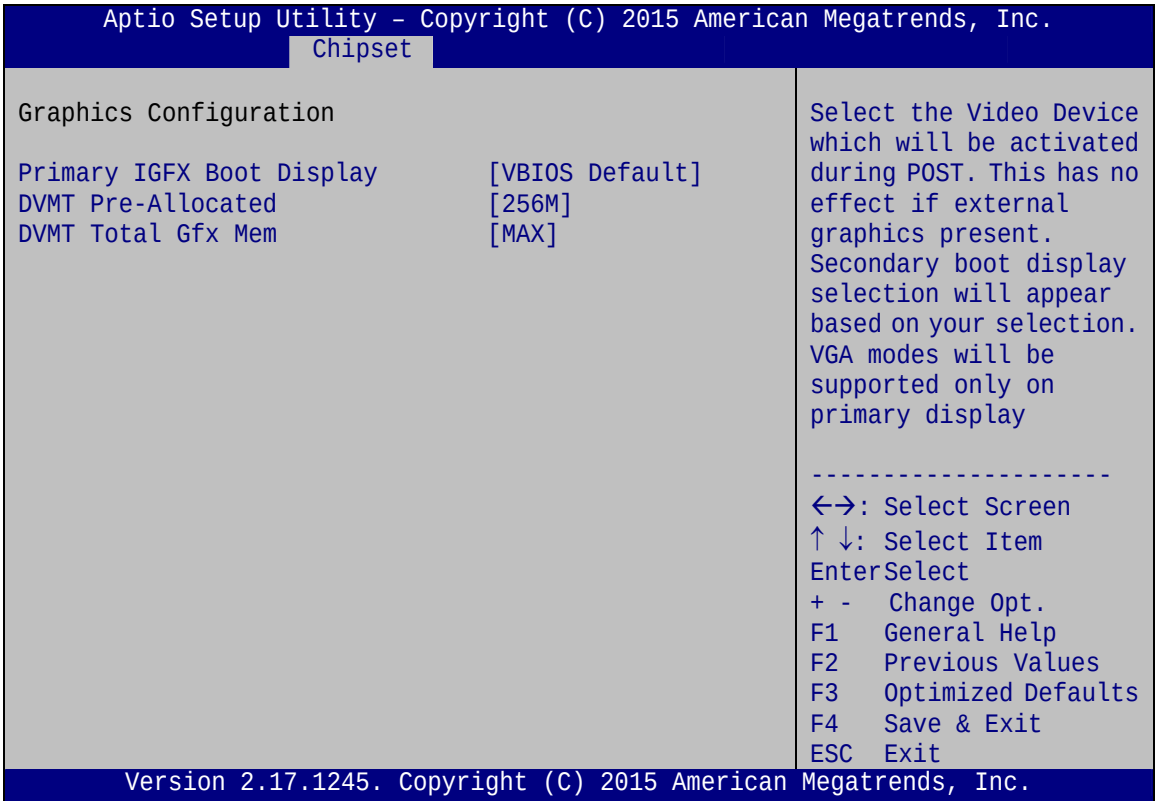

BIOS Menu 17: Graphics Configuration

➔ **Primary IGFX Boot Display [VBIOS Default]**

Use the **Primary IGFX Boot Display** option to select the display device used by the system when it boots. Configuration options are listed below.

- VBIOS Default **DEFAULT**
- VGA1
- HDMI1

➔ **DVMT Pre-Allocated [256M]**

Use the **DVMT Pre-Allocated** option to specify the amount of system memory that can be used by the internal graphics device.

➔ **32M**		32 MB of memory used by internal graphics device
➔ **64M**		64 MB of memory used by internal graphics device
➔ **128M**		128 MB of memory used by internal graphics device
➔ **256M**	**DEFAULT**	256 MB of memory used by internal graphics device
➔ **512M**		512 MB of memory used by internal graphics device

➔ **DVMT Total Gfx Mem [MAX]**

Use the **DVMT Total Gfx Mem** option to specify the maximum amount of memory that can be allocated as graphics memory. Configuration options are listed below.

- 128MB
- 256MB
- MAX **DEFAULT**

4.4.1.2 Memory Configuration

Use the **Memory Configuration** menu (**BIOS Menu 18**) to view the memory information.

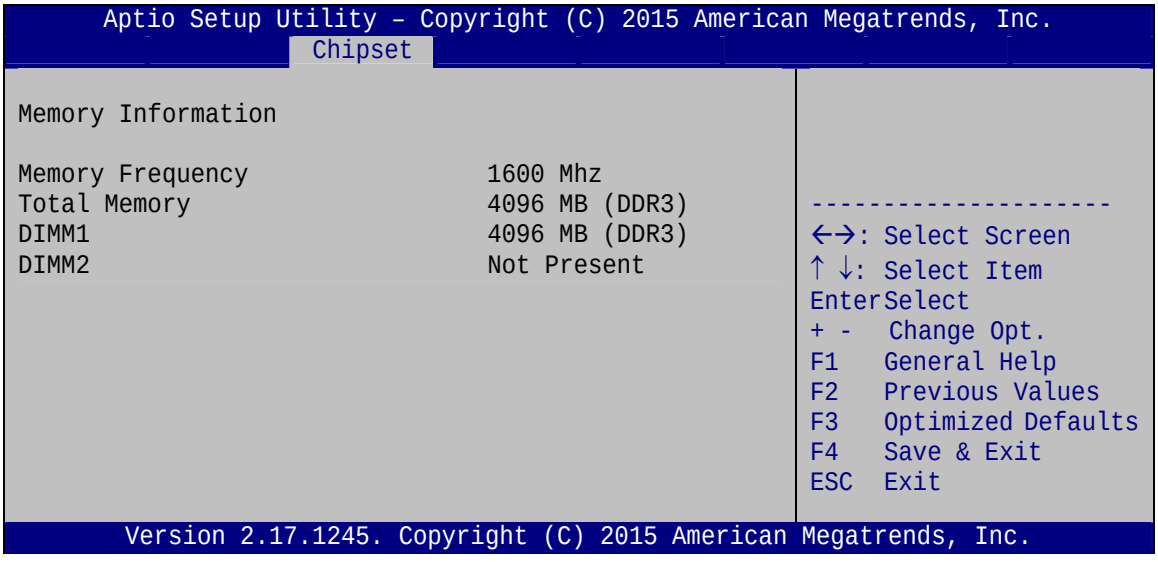

BIOS Menu 18: Memory Configuration

4.4.2 PCH-IO Configuration

Use the **PCH-IO Configuration** menu (**BIOS Menu 19**) to configure the PCH parameters.

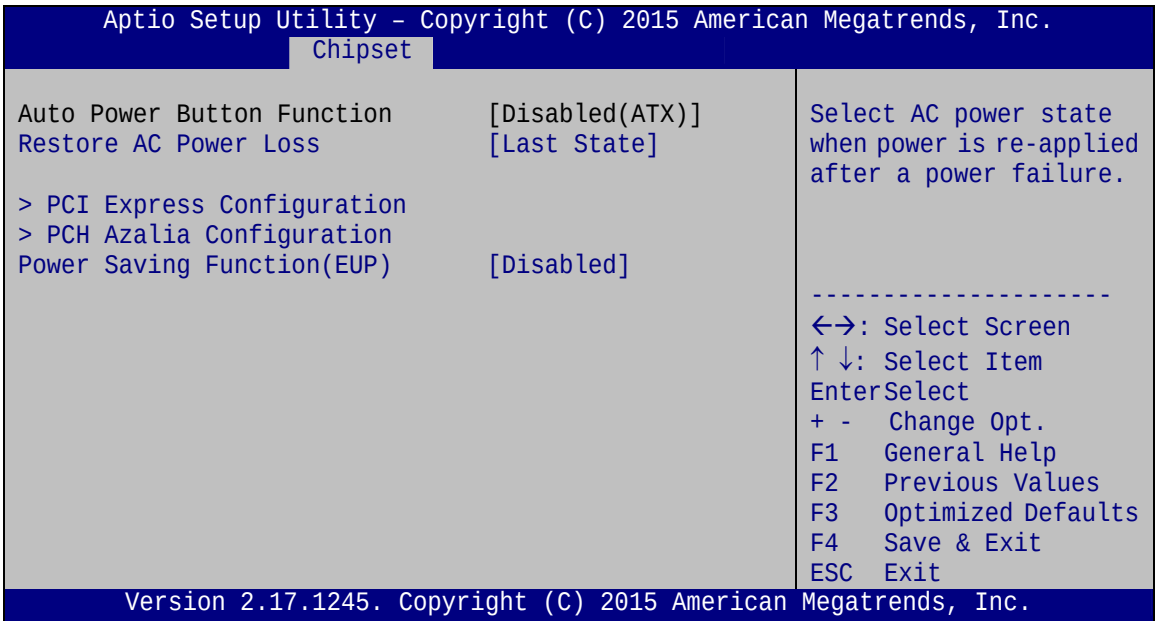

BIOS Menu 19: PCH-IO Configuration

➔ **Restore AC Power Loss [Last State]**

Use the **Restore AC Power** BIOS option to specify what state the system returns to if there is a sudden loss of power to the system.

➔ **Power Off**		The system remains turned off
➔ **Power On**		The system turns on
➔ **Last State**	**DEFAULT**	The system returns to its previous state. If it was on, it turns itself on. If it was off, it remains off.

➔ **Power Saving Function(EUP) [Disabled]**

Use the **Power Saving Function(EUP)** BIOS option to enable or disable the power saving function.

➔ **Disabled** **DEFAULT** Power saving function is disabled.

➔ **Enabled** Power saving function is enabled. It will reduce power consumption when the system is off.

4.4.2.1 PCI Express Configuration

Use the **PCI Express Configuration** submenu (**BIOS Menu 20**) to configure the PCI Express slots.

```
Aptio Setup Utility – Copyright (C) 2015 American Megatrends, Inc.
                    Chipset
PCI Express Configuration                  | M_PCIE2 Slot Settings.
> M_PCIE2 Slot                             |
> M_PCIE1 Slot                             |
                                           | ---------------------
                                           | ←→: Select Screen
                                           | ↑ ↓: Select Item
                                           | EnterSelect
                                           | + -   Change Opt.
                                           | F1    General Help
                                           | F2    Previous Values
                                           | F3    Optimized Defaults
                                           | F4    Save & Exit
                                           | ESC   Exit
Version 2.17.1245. Copyright (C) 2015 American Megatrends, Inc.
```

BIOS Menu 20: PCI Express Configuration

The **M_PCIE2 Slot** and **M_PCIE1 Slot** submenus both contain the following options:

➔ **PCIe Speed [Auto]**

Use the **PCIe Speed** option to configure the PCIe interface speed.

- Auto **DEFAULT**
- Gen 2
- Gen 1

➔ **Detect Non-Compliance Device [Disabled]**

Use the **Detect Non-Compliance Device** option to enable or disable detecting if a non-compliance PCI Express device is connected to the PCI Express slot.

➔ **Disabled** **DEFAULT** Disables to detect if a non-compliance PCI Express device is connected to the PCI Express slot.

➔ **Enabled** Enables to detect if a non-compliance PCI Express device is connected to the PCI Express slot.

4.4.2.2 PCH Azalia Configuration

Use the **PCH Azalia Configuration** submenu (**BIOS Menu 21**) to configure the High Definition Audio codec.

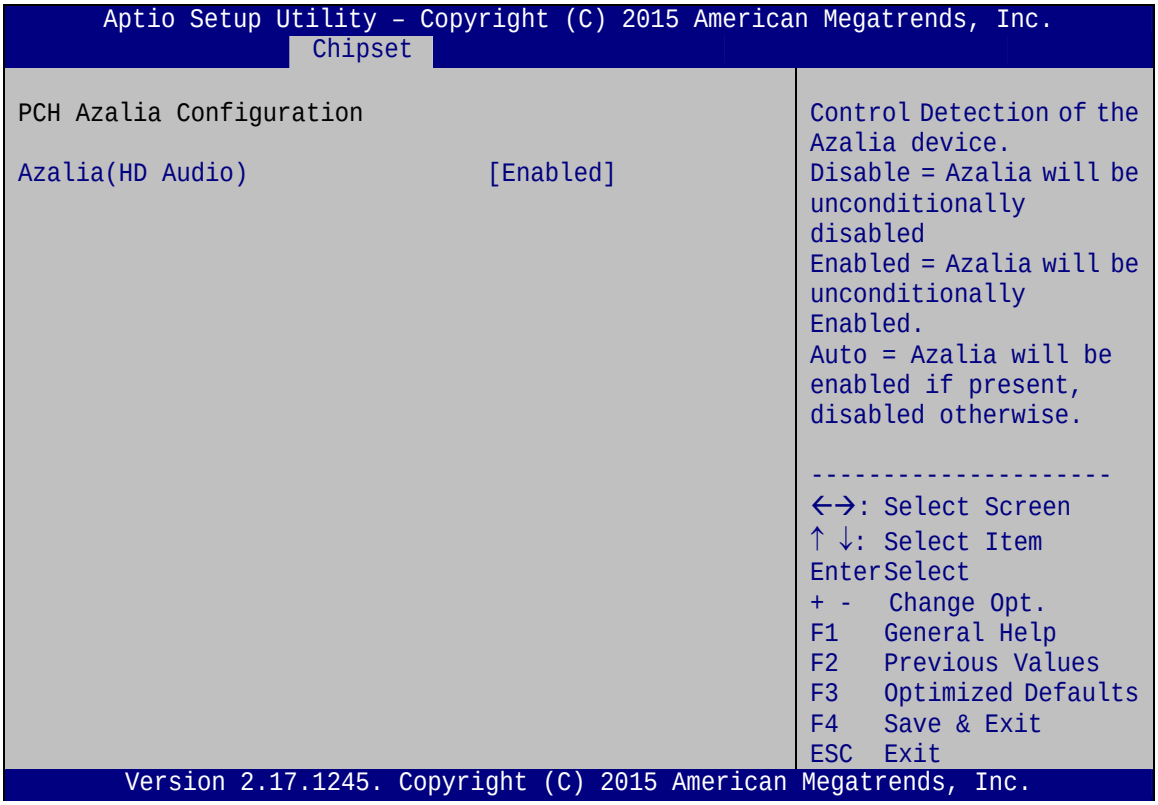

BIOS Menu 21: PCH Azalia Configuration

➔ **Azalia(HD Audio) [Enabled]**

Use the **Azalia(HD Audio)** BIOS option to enable or disable the High Definition Audio controller.

➔ **Disabled** The High Definition Audio controller is disabled.

➔ **Enabled** **DEFAULT** The High Definition Audio controller is enabled.

➔ **Auto** The High Definition Audio controller is automatically detected and enabled.

4.5 Security

Use the **Security** menu (**BIOS Menu 22**) to set system and user passwords.

```
      Aptio Setup Utility – Copyright (C) 2015 American Megatrends, Inc.
  Main    Advanced   Chipset   Security    Boot    Save & Exit

Password Description                              Set Administrator
                                                  Password
If ONLY the Administrator's password is set,
then this only limits access to Setup and is
only asked for when entering Setup.
If ONLY the User's password is set, then this     ---------------------
is a power on password and must be entered to
boot or enter Setup. In Setup the User will       →←: Select Screen
have Administrator rights.                        ↑ ↓: Select Item
The password length must be                       Enter: Select
in the following range:                           +/-:  Change Opt.
Minimum length                  3                 F1:  General Help
Maximum length                  20                F2:  Previous Values
                                                  F3:  Optimized Defaults
Administrator Password                            F4:  Save & Exit
User Password                                     ESC: Exit

       Version 2.17.1245. Copyright (C) 2015 American Megatrends, Inc.
```

BIOS Menu 22: Security

➔ **Administrator Password**

Use the **Administrator Password** to set or change an administrator password.

➔ **User Password**

Use the **User Password** to set or change a user password.

4.6 Boot

Use the **Boot** menu (**BIOS Menu 23**) to configure system boot options.

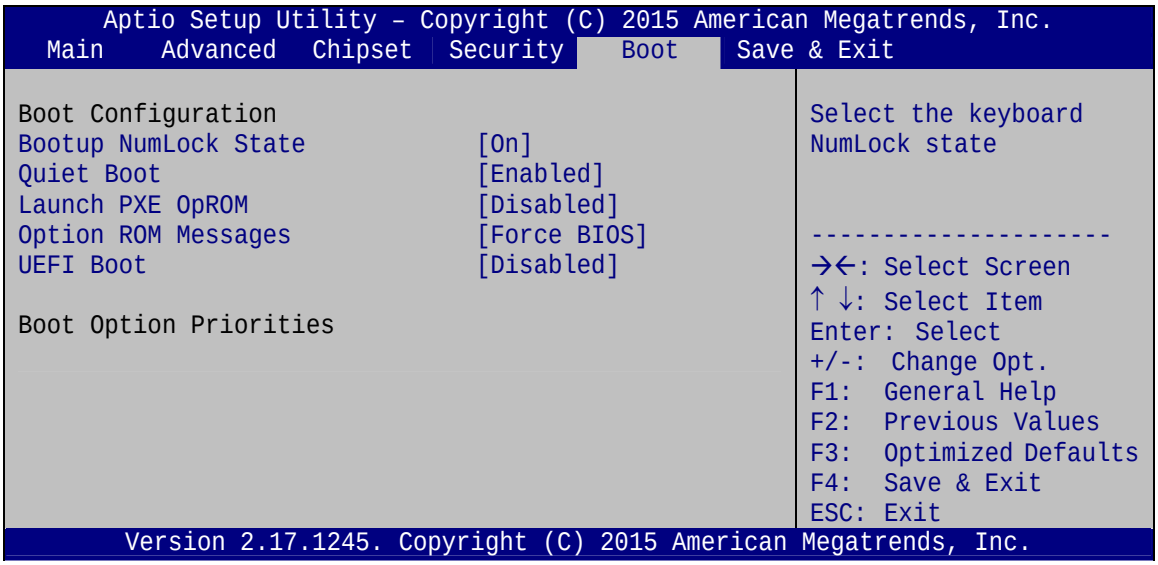

BIOS Menu 23: Boot

➔ **Bootup NumLock State [On]**

Use the **Bootup NumLock State** BIOS option to specify if the number lock setting must be modified during boot up.

➔ **On** **DEFAULT** Allows the Number Lock on the keyboard to be enabled automatically when the computer system boots up. This allows the immediate use of the 10-key numeric keypad located on the right side of the keyboard. To confirm this, the Number Lock LED light on the keyboard is lit.

➔ **Off** Does not enable the keyboard Number Lock automatically. To use the 10-keys on the keyboard, press the Number Lock key located on the upper left-hand corner of the 10-key pad. The Number Lock LED on the keyboard lights up when the Number Lock is engaged.

➔ **Quiet Boot [Enabled]**

Use the **Quiet Boot** BIOS option to select the screen display when the system boots.

➔ **Disabled**		Normal POST messages displayed
➔ **Enabled**	**DEFAULT**	OEM Logo displayed instead of POST messages

➔ **Launch PXE OpROM [Disabled]**

Use the **Launch PXE OpROM** option to enable or disable boot option for legacy network devices.

➔ **Disabled**	**DEFAULT**	Ignore all PXE Option ROMs
➔ **Enabled**		Load PXE Option ROMs

➔ **Option ROM Messages [Force BIOS]**

Use the **Option ROM Messages** option to set the Option ROM display mode.

➔ **Force BIOS**	**DEFAULT**	Sets display mode to force BIOS.
➔ **Keep Current**		Sets display mode to current.

➔ **UEFI Boot [Disabled]**

Use the **UEFI Boot** option to enable or disable to boot from the UEFI devices.

➔ **Disabled**	**DEFAULT**	Boot from UEFI devices is disabled.
➔ **Enabled**		Boot from UEFI devices is enabled.

4.7 Save & Exit

Use the **Save & Exit** menu (**BIOS Menu 24**) to load default BIOS values, optimal failsafe values and to save configuration changes.

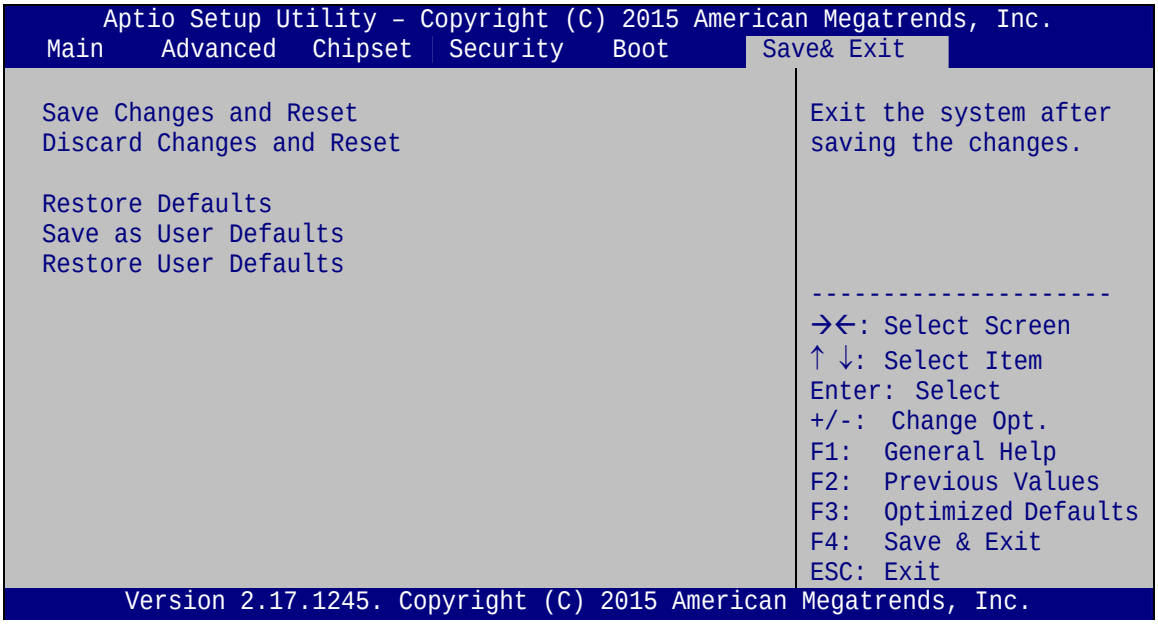

BIOS Menu 24: Save & Exit

➔ **Save Changes and Reset**

Use the **Save Changes and Reset** option to save the changes made to the BIOS options and reset the system.

➔ **Discard Changes and Reset**

Use the **Discard Changes and Reset** option to exit the system without saving the changes made to the BIOS configuration setup program.

➔ **Restore Defaults**

Use the **Restore Defaults** option to load the optimal default values for each of the parameters on the Setup menus. **F3 key can be used for this operation.**

➔ **Save as User Defaults**

Use the **Save as User Defaults** option to save the changes done so far as user defaults.

➔ **Restore User Defaults**

Use the **Restore User Defaults** option to restore the user defaults to all the setup options.

Chapter

5

Troubleshooting and Maintenance

WARNING:

Take Anti-Static precautions whenever maintenance is being carried out on the system components. Failure to take anti-static precautions can cause permanent system damage. For more details on anti-static precautions, please refer to **Section 3.1**.

5.1 IVS-200-ULT2 System Maintenance Overview

NOTE:

When doing maintenance operations on the system, please follow the instructions in this chapter. Failure to follow these instructions may lead to personal injury and system damage.

To preserve the working integrity of the IVS-200-ULT2 embedded system, the system must be properly maintained. If embedded system components need replacement, the proper maintenance procedures must be followed to ensure the system can continue to operate normally.

5.2 System Troubleshooting

This section provides some simple troubleshooting suggestions.

5.2.1 The System Doesn't Turn On

If after turning the system on, there is no power (indicated by the power LED on the front panel not turning on) please do the following:

Step 1: Check that the power cable connector is properly connected to the terminal block on the system rear panel.

Step 2: Check that the power cable connector is properly plugged into the power source.

Step 3: Make sure the power button is turned on.

Step 4: Plug the system into a monitor and check to see if anything appears on the screen. If the boot-up screen appears it means the power LED has failed. To fix this problem, contact an IEI sales representative directly.

5.2.2 The System Doesn't Boot Up

If the system doesn't boot up please do the following:

Step 1: Check the power is turned on. See **Section 5.2.1** above.

Step 2: Make sure the SO-DIMM module is properly installed.

Step 3: Reset the system using the reset CMOS jumper. See **Section 3.5.1**.

5.2.3 More Troubleshooting

Nothing appears on the monitor after booting up the system: Make sure the monitor is properly connected to the system and the monitor is connected to a power supply and turned on.

WARNING!

If all troubleshooting measures have been taken and the system still fails to start, contact the IEI reseller or vendor you purchased the IVS-200-ULT2 from or contact an IEI sales representative directly. To contact an IEI sales representative, please send an email to sales@ieiworld.com.

5.3 Component Replacement Procedure

WARNING!

Users are not advised to attempt to repair or replace any internal or external components of the IVS-200-ULT2 embedded system other than those listed below. If any other components fail or need replacement, contact the IEI reseller or vendor you purchased the IVS-200-ULT2 from or contact an IEI sales representative directly. To contact an IEI sales representative, please send an email to sales@ieiworld.com.

The embedded system components listed below can all be replaced if they fail:

- SO-DIMM module
- Internal hard disk drive (see **Section 3.6**)
- mSATA or PCIe Mini card (see **Section 3.7**)
- WLAN or WWAN module (see **Section 3.8**)

5.3.1 SO-DIMM Replacement

WARNING:

Using incorrectly specified SO-DIMM may cause permanently damage the IVS-200-ULT2. Please make sure the purchased SO-DIMM complies with the memory specifications of the IVS-200-ULT2.

To replace a SO-DIMM memory module into a SO-DIMM socket, please follow the steps below.

Step 1: **Open the bottom cover.** Place the IVS-200-ULT2 on an anti-static pad with the bottom panel facing up and the bottom cover opened (see **Section 3.4**).

Step 2: **Locate the SO-DIMM** on the motherboard.

Figure 5-1: SO-DIMM Location

Step 3: **Remove the SO-DIMM** by releasing the arms on the SO-DIMM socket.

Step 4: **Align the new SO-DIMM with the socket**. The SO-DIMM must be oriented in such a way that the notch in the middle of the SO-DIMM must be aligned with the plastic bridge in the socket (**Figure 5-2**).

Step 5: **Insert the SO-DIMM**. Push the SO-DIMM chip into the socket at an angle (**Figure 5-2**).

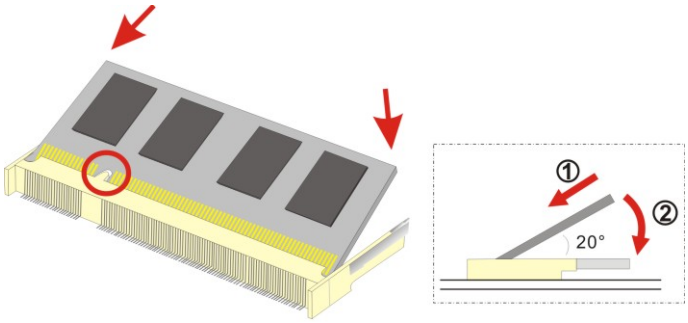

Figure 5-2: SO-DIMM Installation

Step 6: **Open the SO-DIMM socket arms**. Gently pull the arms of the SO-DIMM socket out and push the rear of the SO-DIMM down (See **Figure 5-2**).

Step 7: **Secure the SO-DIMM**. Release the arms on the SO-DIMM socket. They clip into place and secure the SO-DIMM in the socket.

Chapter

6

Interface Connectors

6.1 Peripheral Interface Connectors

The IVS-200-ULT2 embedded system motherboard comes with a number of peripheral interface connectors and configuration jumpers. The connector locations are shown in **Figure 6-1**. The Pin 1 locations of the on-board connectors are also indicated in the diagram below. The connector pinouts for these connectors are listed in the following sections.

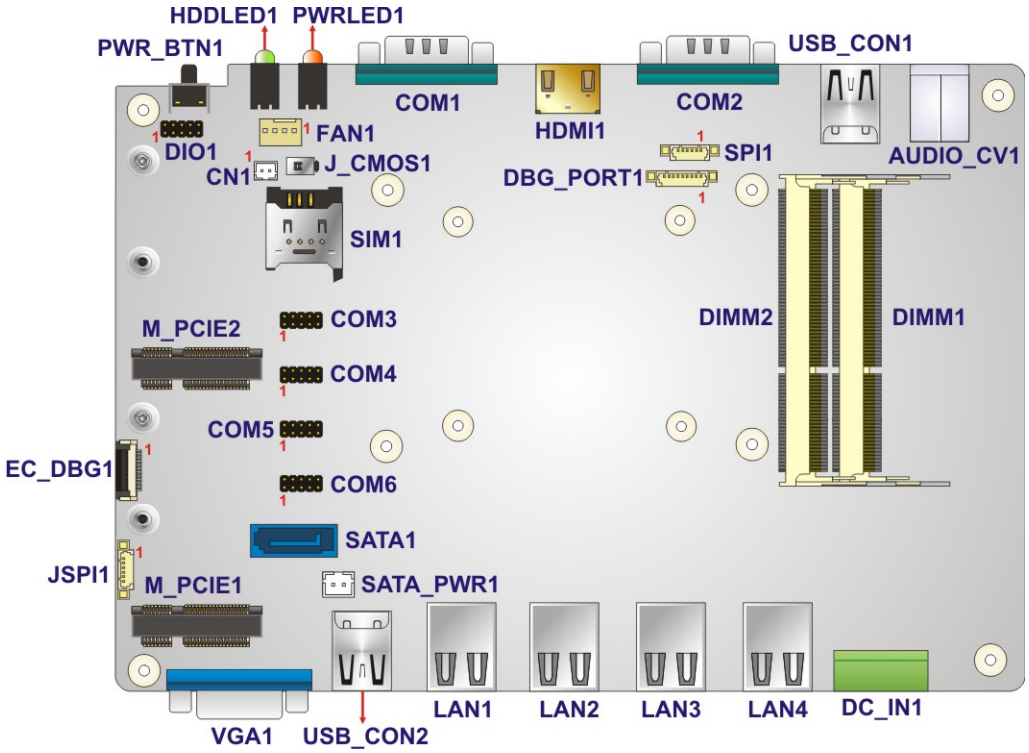

Figure 6-1: Jumper and Connector Locations

6.2 Internal Peripheral Connectors

Internal peripheral connectors are found on the motherboard and are only accessible when the motherboard is outside of the chassis. The table below shows a list of the peripheral interface connectors on the IVS-200-ULT2's motherboard. Pinouts of these connectors can be found in the following sections.

Connector	Type	Label
Battery connector	2-pin wafer	CN1

DDR3 SO-DIMM slots	DDR3 SO-DIMM slot	DIMM1, DIMM2
Digital I/O connector	10-pin header	DIO1
Fan connector	4-pin wafer	FAN1
PCIe Mini card/mSATA slot	PCIe Mini card slot	M_PCIE1
PCIe Mini card slot	PCIe Mini card slot	M_PCIE2
RS-232 serial port connectors	10-pin header	COM3, COM4, COM5, COM6
SATA 6Gb/s drive connector	7-pin SATA connector	SATA1
SATA power connector	2-pin wafer	SATA_PWR1
SPI flash connector (BIOS)	6-pin wafer	SPI1
SPI flash connector (EC)	6-pin wafer	JSPI1

Table 6-1: Peripheral Interface Connectors

6.2.1 Battery Connector (CN1)

PIN NO.	DESCRIPTION	PIN NO.	DESCRIPTION
1	VBATT	2	GND

Table 6-2: Battery Connector (CN1) Pinouts

6.2.2 Digital I/O Connector (DIO1)

PIN NO.	DESCRIPTION	PIN NO.	DESCRIPTION
1	GND	2	+5V
3	DOUT3	4	DOUT2
5	DOUT1	6	DOUT0
7	DIN3	8	DIN2
9	DIN1	10	DIN0

Table 6-3: Digital I/O Connector (DIO1) Pinouts

6.2.3 Fan Connector (FAN1)

PIN NO.	DESCRIPTION
1	GND
2	+12V
3	FANIO1
4	FANOUT1

Table 6-4: Fan Connector (FAN1) Pinouts

6.2.4 RS-232 Serial Port Connectors (COM3 ~ COM6)

PIN NO.	DESCRIPTION	PIN NO.	DESCRIPTION
1	DCD	2	DSR
3	RXD	4	RTS
5	TXD	6	CTS
7	DTR	8	RI
9	GND	10	GND

Table 6-5: RS-232 Serial Port Connector (COM3 ~ COM6) Pinouts

6.2.5 SATA Power Connector (SATA_PWR1)

PIN NO.	DESCRIPTION
1	+5V
2	GND

Table 6-6: SATA Power Connector (SATA_PWR1) Pinouts

6.2.6 SPI Flash Connector, BIOS (SPI1)

PIN NO.	DESCRIPTION
1	+SPI_VCC
2	SPI_CS0#_CN
3	SPI_SO0_CN
4	SPI_CLK0_CN
5	SPI_SI0_CN
6	GND

Table 6-7: SPI Flash Connector (SPI1) Pinouts

6.2.7 SPI Flash Connector, EC (JSPI1)

PIN NO.	DESCRIPTION
1	+SPI_VCC_EC
2	SPI_CS0#_CN_EC
3	SPI_SO0_CN_EC
4	SPI_CLK0_CN_EC
5	SPI_SI0_CN_EC
6	GND

Table 6-8: SPI Flash Connector (JSPI1) Pinouts

6.3 External Interface Panel Connectors

The table below lists the rear panel connectors on the motherboard. Pinouts of these connectors can be found in the following sections.

6.3.1 Ethernet Connector (LAN1)

PIN NO.	DESCRIPTION	PIN NO.	DESCRIPTION	
1	MDI0+	5	MDI2+	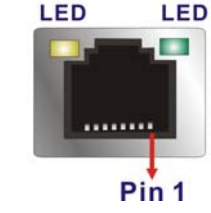
2	MDI0-	6	MDI2-	
3	MDI1+	7	MDI3+	
4	MDI1-	8	MDI3-	

Table 6-9: Ethernet Connector (LAN1) Pinouts

6.3.2 Ethernet Connectors (LAN2 ~ LAN4)

PIN NO.	DESCRIPTION	PIN NO.	DESCRIPTION
1	TRD0+	5	TRD2+
2	TRD0-	6	TRD2-
3	TRD1+	7	TRD3+
4	TRD1-	8	TRD3-

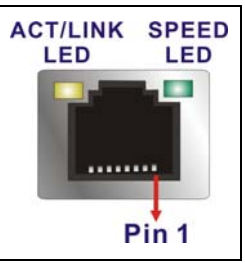

Table 6-10: Ethernet Connectors (LAN2 ~ LAN4) Pinouts

6.3.3 RS-232/422/485 DB-9 Serial Ports (COM1, COM2)

PIN NO.	RS-232	RS-422	RS-485
1	DCD	TXD422-	TXD485-
2	RX	TXD422+	TXD485+
3	TX	RXD422+	
4	DTR	RXD422-	
5	GND		
6	DSR		
7	RTS		
8	CTS		
9	RI		

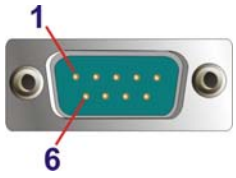

Table 6-11: RS-232/422/485 DB-9 Serial Port (COM1, COM2) Pinouts

6.3.4 USB 2.0 Connectors (USB_CON2)

PIN NO.	DESCRIPTION	PIN NO.	DESCRIPTION
1	+5V	5	+5V
2	USB2P0_DM2_L	6	USB2P0_DM3_L
3	USB2P0_DP2_L	7	USB2P0_DP3_L
4	GND	8	GND

Table 6-12: USB 2.0 Connectors (USB_CON2) Pinouts

6.3.5 USB 3.0 Connectors (USB_CON1)

PIN NO.	DESCRIPTION	PIN NO.	DESCRIPTION	
1	+5V	10	+5V	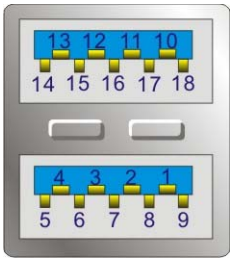
2	USB2P0_DM0	11	USB2P0_DM1	
3	USB2P0_DP0	12	USB2P0_DP1	
4	GND	13	GND	
5	USB3P0_RXDN0	14	USB3P0_RXDN1	
6	USB3P0_RXDP0	15	USB3P0_RXDP1	
7	GND	16	GND	
8	USB3P0_TXDN0	17	USB3P0_TXDN1	
9	USB3P0_TXDP0	18	USB3P0_TXDP1	

Table 6-13: USB 3.0 Connectors (USB_CON1) Pinouts

6.3.6 Power Input Terminal Block (DC_IN1)

Table 6-14: Power Input Terminal Block (DC_IN1) Pinouts

6.3.7 VGA Connector (VGA1)

PIN NO.	DESCRIPTION	PIN NO.	DESCRIPTION	
1	Red	2	Green	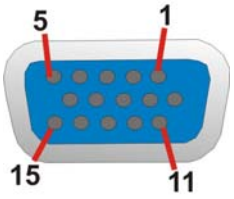
3	Blue	4	NC	
5	GND	6	GND	
7	GND	8	GND	
9	VGAVCC	10	HOTPLUG	
11	NC	12	DDCDAT	
13	HSYNC	14	VSYNC	
15	DDCCLK			

Table 6-15: VGA Connector (VGA1) Pinouts

Appendix

A

Regulatory Compliance

DECLARATION OF CONFORMITY

This equipment is in conformity with the following EU directives:

- EMC Directive 2004/108/EC
- Low-Voltage Directive 2006/95/EC
- RoHS II Directive 2011/65/EU
- Ecodesign Directive 2009/125/EC

If the user modifies and/or install other devices in the equipment, the CE conformity declaration may no longer apply.

If this equipment has telecommunications functionality, it also complies with the requirements of the R&TTE Directive 1999/5/EC.

English IEI Integration Corp declares that this equipment is in compliance with the essential requirements and other relevant provisions of Directive 1999/5/EC.
Български [Bulgarian] IEI Integration Corp. декларира, че този оборудване е в съответствие със съществените изисквания и другите приложими правила на Директива 1999/5/EC.
Česky [Czech] IEI Integration Corp tímto prohlašuje, že tento zařízení je ve shodě se základními požadavky a dalšími příslušnými ustanoveními směrnice 1999/5/ES.
Dansk [Danish] IEI Integration Corp erklærer herved, at følgende udstyr overholder de væsentlige krav og øvrige relevante krav i direktiv 1999/5/EF.
Deutsch [German] IEI Integration Corp, erklärt dieses Gerät entspricht den grundlegenden Anforderungen und den weiteren entsprechenden Vorgaben der Richtlinie 1999/5/EU.
Eesti [Estonian] IEI Integration Corp deklareerib seadme seadme vastavust direktiivi 1999/5/EÜ põhinõuetele ja nimetatud direktiivist tulenevatele teistele asjakohastele sätetele.

Español [Spanish] IEI Integration Corp declara que el equipo cumple con los requisitos esenciales y cualesquiera otras disposiciones aplicables o exigibles de la Directiva 1999/5/CE.
Ελληνική [Greek] IEI Integration Corp ΔΗΛΩΝΕΙ ΟΤΙ ΕΞΟΠΛΙΣΜΟΣ ΣΥΜΜΟΡΦΩΝΕΤΑΙ ΠΡΟΣ ΤΙΣ ΟΥΣΙΩΔΕΙΣ ΑΠΑΙΤΗΣΕΙΣ ΚΑΙ ΤΙΣ ΛΟΙΠΕΣ ΣΧΕΤΙΚΕΣ ΔΙΑΤΑΞΕΙΣ ΤΗΣ ΟΔΗΓΙΑΣ 1999/5/ΕΚ.
Français [French] IEI Integration Corp déclare que l'appareil est conforme aux exigences essentielles et aux autres dispositions pertinentes de la directive 1999/5/CE.
Italiano [Italian] IEI Integration Corp dichiara che questo apparecchio è conforme ai requisiti essenziali ed alle altre disposizioni pertinenti stabilite dalla direttiva 1999/5/CE.
Latviski [Latvian] IEI Integration Corp deklarē, ka iekārta atbilst būtiskajām prasībām un citiem ar to saistītajiem noteikumiem Direktīvas 1999/5/EK.
Lietuvių [Lithuanian] IEI Integration Corp deklaruoja, kad šis įranga atitinka esminius reikalavimus ir kitas 1999/5/EB Direktyvos nuostatas.
Nederlands [Dutch] IEI Integration Corp dat het toestel toestel in overeenstemming is met de essentiële eisen en de andere relevante bepalingen van richtlijn 1999/5/EG.
Malti [Maltese] IEI Integration Corp jiddikjara li dan prodott jikkonforma mal-ħtiġijiet essenzjali u ma provvedimenti oħrajn relevanti li hemm fid-Dirrettiva 1999/5/EC.
Magyar [Hungarian] IEI Integration Corp nyilatkozom, hogy a berendezés megfelel a vonatkozó alapvetõ követelményeknek és az 1999/5/EC irányelv egyéb elõírásainak.
Polski [Polish] IEI Integration Corp oświadcza, że wyrobu jest zgodny z zasadniczymi wymogami oraz pozostałymi stosownymi postanowieniami Dyrektywy 1999/5/EC.
Português [Portuguese] IEI Integration Corp declara que este equipamento está conforme com os requisitos essenciais e outras disposições da Directiva 1999/5/CE.

Româna [Romanian] IEI Integration Corp declară că acest echipament este in conformitate cu cerințele esențiale şi cu celelalte prevederi relevante ale Directivei 1999/5/CE.
Slovensko [Slovenian] IEI Integration Corp izjavlja, da je ta opreme v skladu z bistvenimi zahtevami in ostalimi relevantnimi določili direktive 1999/5/ES.
Slovensky [Slovak] IEI Integration Corp týmto vyhlasuje, že zariadenia spĺňa základné požiadavky a všetky príslušné ustanovenia Smernice 1999/5/ES.
Suomi [Finnish] IEI Integration Corp vakuuttaa täten että laitteet on direktiivin 1999/5/EY oleellisten vaatimusten ja sitä koskevien direktiivin muiden ehtojen mukainen.
Svenska [Swedish] IEI Integration Corp förklarar att denna utrustningstyp står I överensstämmelse med de väsentliga egenskapskrav och övriga relevanta bestämmelser som framgår av direktiv 1999/5/EG.

FCC WARNING

This equipment complies with Part 15 of the FCC Rules. Operation is subject to the following two conditions:

- This device may not cause harmful interference, and
- This device must accept any interference received, including interference that may cause undesired operation.

This equipment has been tested and found to comply with the limits for a Class A digital device, pursuant to part 15 of the FCC Rules. These limits are designed to provide reasonable protection against harmful interference when the equipment is operated in a commercial environment. This equipment generates, uses, and can radiate radio frequency energy and, if not installed and used in accordance with the instruction manual, may cause harmful interference to radio communications. Operation of this equipment in a residential area is likely to cause harmful interference in which case the user will be required to correct the interference at his own expense.

Federal Communication Commission Interference Statement

This equipment has been assembled with components that comply with the limits for a Class B digital device, pursuant to Part 15 of the FCC Rules. These limits are designed to provide reasonable protection against harmful interference in a residential installation. This equipment generates, uses and can radiate radio frequency energy and, if not installed and used in accordance with the instructions, may cause harmful interference to radio communications. However, there is no guarantee that interference will not occur in a particular installation. If this equipment does cause harmful interference to radio or television reception, which can be determined by turning the equipment off and on, the user is encouraged to try to correct the interference by one of the following measures:

- Reorient or relocate the receiving antenna.
- Increase the separation between the equipment and receiver.
- Connect the equipment into an outlet on a circuit different from that to which the receiver is connected.
- Consult the dealer or an experienced radio/TV technician for help.

Appendix

B

Safety Precautions

WARNING:

The precautions outlined in this chapter should be strictly followed. Failure to follow these precautions may result in permanent damage to the IVS-200-ULT2.

B.1 Safety Precautions

Please follow the safety precautions outlined in the sections that follow:

B.1.1 General Safety Precautions

Please ensure the following safety precautions are adhered to at all times.

- ***Follow the electrostatic precautions*** outlined below whenever the IVS-200-ULT2 is opened.
- ***Make sure the power is turned off and the power cord is disconnected*** whenever the IVS-200-ULT2 is being installed, moved or modified.
- ***Do not apply voltage levels that exceed the specified voltage range***. Doing so may cause fire and/or an electrical shock.
- ***Electric shocks can occur*** if the IVS-200-ULT2 chassis is opened when the IVS-200-ULT2 is running.
- ***Do not drop or insert any objects*** into the ventilation openings of the IVS-200-ULT2.
- ***If considerable amounts of dust, water, or fluids enter the IVS-200-ULT2***, turn off the power supply immediately, unplug the power cord, and contact the IVS-200-ULT2 vendor.
- **DO NOT**:
  - Drop the IVS-200-ULT2 against a hard surface.
  - In a site where the ambient temperature exceeds the rated temperature

B.1.2 Anti-static Precautions

WARNING:

Failure to take ESD precautions during the installation of the IVS-200-ULT2 may result in permanent damage to the IVS-200-ULT2 and severe injury to the user.

Electrostatic discharge (ESD) can cause serious damage to electronic components, including the IVS-200-ULT2. Dry climates are especially susceptible to ESD. It is therefore critical that whenever the IVS-200-ULT2 is opened and any of the electrical components are handled, the following anti-static precautions are strictly adhered to.

- ***Wear an anti-static wristband***: Wearing a simple anti-static wristband can help to prevent ESD from damaging any electrical component.
- ***Self-grounding***: Before handling any electrical component, touch any grounded conducting material. During the time the electrical component is handled, frequently touch any conducting materials that are connected to the ground.
- ***Use an anti-static pad***: When configuring or working with an electrical component, place it on an antic-static pad. This reduces the possibility of ESD damage.
- ***Only handle the edges of the electrical component***: When handling the electrical component, hold the electrical component by its edges.

B.1.3 Product Disposal

CAUTION:

Risk of explosion if battery is replaced by and incorrect type. Only certified engineers should replace the on-board battery.

Dispose of used batteries according to instructions and local regulations.

- Outside the European Union - If you wish to dispose of used electrical and electronic products outside the European Union, please contact your local authority so as to comply with the correct disposal method.
- Within the European Union:

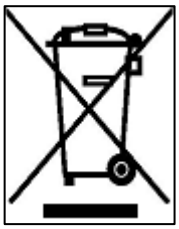

EU-wide legislation, as implemented in each Member State, requires that waste electrical and electronic products carrying the mark (left) must be disposed of separately from normal household waste. This includes monitors and electrical accessories, such as signal cables or power cords. When you need to dispose of your display products, please follow the guidance of your local authority, or ask the shop where you purchased the product. The mark on electrical and electronic products only applies to the current European Union Member States.

Please follow the national guidelines for electrical and electronic product disposal.

B.2 Maintenance and Cleaning Precautions

When maintaining or cleaning the IVS-200-ULT2, please follow the guidelines below.

B.2.1 Maintenance and Cleaning

Prior to cleaning any part or component of the IVS-200-ULT2, please read the details below.

- The interior of the IVS-200-ULT2 does not require cleaning. Keep fluids away from the IVS-200-ULT2 interior.
- Be cautious of all small removable components when vacuuming the IVS-200-ULT2.
- Turn the IVS-200-ULT2 off before cleaning the IVS-200-ULT2.
- Never drop any objects or liquids through the openings of the IVS-200-ULT2.
- Be cautious of any possible allergic reactions to solvents or chemicals used when cleaning the IVS-200-ULT2.
- Avoid eating, drinking and smoking within vicinity of the IVS-200-ULT2.

B.2.2 Cleaning Tools

Some components in the IVS-200-ULT2 may only be cleaned using a product specifically designed for the purpose. In such case, the product will be explicitly mentioned in the cleaning tips. Below is a list of items to use when cleaning the IVS-200-ULT2.

- ***Cloth*** – Although paper towels or tissues can be used, a soft, clean piece of cloth is recommended when cleaning the IVS-200-ULT2.
- ***Water or rubbing alcohol*** – A cloth moistened with water or rubbing alcohol can be used to clean the IVS-200-ULT2.
- ***Using solvents*** – The use of solvents is not recommended when cleaning the IVS-200-ULT2 as they may damage the plastic parts.
- ***Vacuum cleaner*** – Using a vacuum specifically designed for computers is one of the best methods of cleaning the IVS-200-ULT2. Dust and dirt can restrict the airflow in the IVS-200-ULT2 and cause its circuitry to corrode.
- ***Cotton swabs*** - Cotton swaps moistened with rubbing alcohol or water are excellent tools for wiping hard to reach areas.
- ***Foam swabs*** - Whenever possible, it is best to use lint free swabs such as foam swabs for cleaning.

Appendix

C

BIOS Menu Options

C.1 BIOS Configuration Options

Below is a list of BIOS configuration options described in **Chapter 4**.

System Date [xx/xx/xx] 42
System Time [xx:xx:xx] 42
Hyper-threading [Enabled] 45
Active Processor Cores [All] 45
Intel Virtualization Technology [Enabled] 46
EIST [Enabled] 46
Intel TXT(LT) Support [Disabled] 46
ACPI Sleep State [S1 (CPU Stop Clock)] 47
Serial Port [Enabled] 49
Change Settings [Auto] 49
Serial Port Mode [RS232] 50
Serial Port [Enabled] 50
Change Settings [Auto] 50
Serial Port Mode [RS232] 51
Wake system with Fixed Time [Disabled] 52
Console Redirection [Disabled] 53
Terminal Type [ANSI] 54
Bits per second [115200] 54
Data Bits [8] 55
Parity [None] 55
Stop Bits [1] 55
Auto Recovery Function [Disabled] 56
SATA Controller(s) [Enabled] 57
SATA Mode Selection [AHCI] 57
Hot Plug [Disabled] 58
Intel(R) Rapid Start Technology [Disabled] 58
USB Devices 59
Legacy USB Support [Enabled] 59
PC Health Status 60
VT-d [Enabled] 62
Primary IGFX Boot Display [VBIOS Default] 63

DVMT Pre-Allocated [256M] 63
DVMT Total Gfx Mem [MAX] 64
Restore AC Power Loss [Last State] 65
Power Saving Function(EUP) [Disabled] 65
PCIe Speed [Auto] 66
Detect Non-Compliance Device [Disabled] 66
Azalia(HD Audio) [Enabled] 67
Administrator Password 68
User Password 68
Bootup NumLock State [On] 69
Quiet Boot [Enabled] 70
Launch PXE OpROM [Disabled] 70
Option ROM Messages [Force BIOS] 70
UEFI Boot [Disabled] 70
Save Changes and Reset 71
Discard Changes and Reset 71
Restore Defaults 71
Save as User Defaults 71
Restore User Defaults 72

Appendix

D

Watchdog Timer

NOTE:

The following discussion applies to DOS environment. IEI support is contacted or the IEI website visited for specific drivers for more sophisticated operating systems, e.g., Windows and Linux.

The Watchdog Timer is provided to ensure that standalone systems can always recover from catastrophic conditions that cause the CPU to crash. This condition may have occurred by external EMI or a software bug. When the CPU stops working correctly, Watchdog Timer either performs a hardware reset (cold boot) or a Non-Maskable Interrupt (NMI) to bring the system back to a known state.

A BIOS function call (INT 15H) is used to control the Watchdog Timer:

INT 15H:

AH – 6FH Sub-function:	
AL – 2:	Sets the Watchdog Timer's period.
BL:	Time-out value (Its unit-second is dependent on the item "Watchdog Timer unit select" in CMOS setup).

Table D-1: AH-6FH Sub-function

Call sub-function 2 to set the time-out period of Watchdog Timer first. If the time-out value is not zero, the Watchdog Timer starts counting down. While the timer value reaches zero, the system resets. To ensure that this reset condition does not occur, calling sub-function 2 must periodically refresh the Watchdog Timer. However, the Watchdog timer is disabled if the time-out value is set to zero.

A tolerance of at least 10% must be maintained to avoid unknown routines within the operating system (DOS), such as disk I/O that can be very time-consuming.

NOTE:

When exiting a program it is necessary to disable the Watchdog Timer, otherwise the system resets.

Example program:

```
; INITIAL TIMER PERIOD COUNTER
;
W_LOOP:

        MOV     AX, 6F02H       ;setting the time-out value
        MOV     BL, 30          ;time-out value is 48 seconds
        INT      15H
 ;
; ADD THE APPLICATION PROGRAM HERE
;
        CMP      EXIT_AP, 1     ;is the application over?
        JNE      W_LOOP         ;No, restart the application

        MOV     AX, 6F02H       ;disable Watchdog Timer
        MOV     BL, 0           ;
        INT      15H
;
; EXIT ;
```

Appendix

E

Hazardous Materials Disclosure

E.1 Hazardous Materials Disclosure Table for IPB Products Certified as RoHS Compliant Under 2002/95/EC Without Mercury

The details provided in this appendix are to ensure that the product is compliant with the Peoples Republic of China (China) RoHS standards. The table below acknowledges the presences of small quantities of certain materials in the product, and is applicable to China RoHS only.

A label will be placed on each product to indicate the estimated “Environmentally Friendly Use Period” (EFUP). This is an estimate of the number of years that these substances would “not leak out or undergo abrupt change.” This product may contain replaceable sub-assemblies/components which have a shorter EFUP such as batteries and lamps. These components will be separately marked.

Please refer to the table on the next page.

Part Name	Toxic or Hazardous Substances and Elements					
	Lead (Pb)	Mercury (Hg)	Cadmium (Cd)	Hexavalent Chromium (CR(VI))	Polybrominated Biphenyls (PBB)	Polybrominated Diphenyl Ethers (PBDE)
Housing	O	O	O	O	O	O
Display	O	O	O	O	O	O
Printed Circuit Board	O	O	O	O	O	O
Metal Fasteners	O	O	O	O	O	O
Cable Assembly	O	O	O	O	O	O
Fan Assembly	O	O	O	O	O	O
Power Supply Assemblies	O	O	O	O	O	O
Battery	O	O	O	O	O	O

O: This toxic or hazardous substance is contained in all of the homogeneous materials for the part is below the limit requirement in SJ/T11363-2006

X: This toxic or hazardous substance is contained in at least one of the homogeneous materials for this part is above the limit requirement in SJ/T11363-2006

此附件旨在确保本产品符合中国 RoHS 标准。以下表格标示此产品中某有毒物质的含量符合中国 RoHS 标准规定的限量要求。

本产品上会附有"环境友好使用期限"的标签，此期限是估算这些物质"不会有泄漏或突变"的年限。本产品可能包含有较短的环境友好使用期限的可替换元件，像是电池或灯管，这些元件将会单独标示出来。

部件名称	有毒有害物质或元素					
	铅 (Pb)	汞 (Hg)	镉 (Cd)	六价铬 (CR(VI))	多溴联苯 (PBB)	多溴二苯醚 (PBDE)
壳体	O	O	O	O	O	O
显示	O	O	O	O	O	O
印刷电路板	O	O	O	O	O	O
金属螺帽	O	O	O	O	O	O
电缆组装	O	O	O	O	O	O
风扇组装	O	O	O	O	O	O
电力供应组装	O	O	O	O	O	O
电池	O	O	O	O	O	O
O: 表示该有毒有害物质在该部件所有物质材料中的含量均在 SJ/T11363-2006 标准规定的限量要求以下。 X: 表示该有毒有害物质至少在该部件的某一均质材料中的含量超出 SJ/T11363-2006 标准规定的限量要求。						